(No Model.) 3 Sheets—Sheet 1.

J. K. STARLEY.

ROLLER BEARING.

No. 352,841. Patented Nov. 16, 1886.

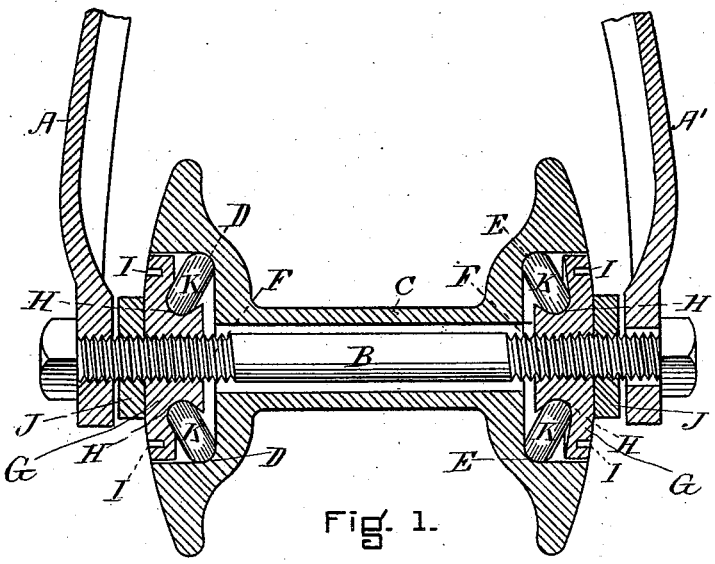

Fig. 1.

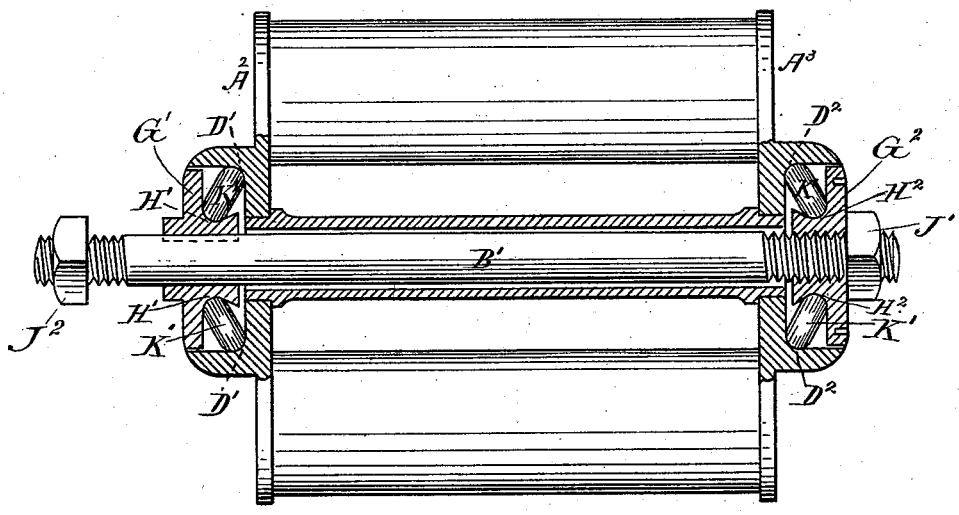

Fig. 2.

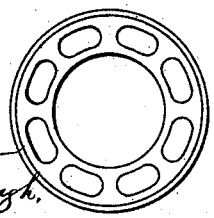

Fig. 3.

Fig. 4.

WITNESSES.
C. E. Walker
Joseph Lohbaugh.

INVENTOR.
John K. Starley
By Charles E. Pratt
Atty

N. PETERS, Photo-Lithographer, Washington, D. C.