H. T. STITH.

Traction-Wheel.

No. 224,741. Patented Feb. 17, 1880.

Fig. 1.

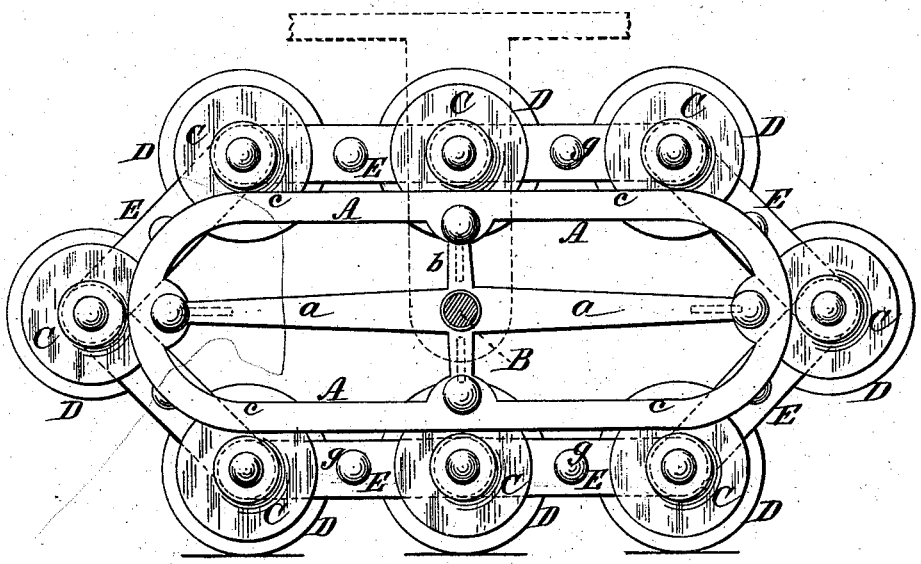

Fig. 2.

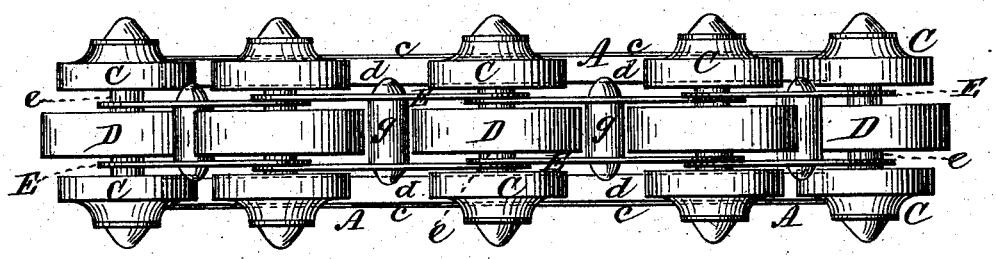

Fig. 3

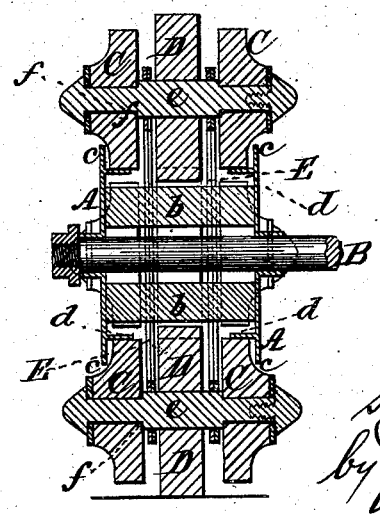

Witnesses:

Floyd Norris

Howell Bartle

Inventor:

Henry T. Stith

by Johnson & Johnson

Attys

N. PETERS, PHOTO-LITHOGRAPHER, WASHINGTON, D. C.