US006814541B2

(12) **United States Patent**
Evans et al.

(10) **Patent No.: US 6,814,541 B2**
(45) **Date of Patent: Nov. 9, 2004**

(54) **JET AIRCRAFT FAN CASE CONTAINMENT DESIGN**

(75) Inventors: **Charles R. Evans**, Cincinnati, OH (US); **Douglas D. Ward**, West Chester, OH (US)

(73) Assignee: **General Electric Company**, Schenectady, NY (US)

(*) Notice: Subject to any disclaimer, the term of this patent is extended or adjusted under 35 U.S.C. 154(b) by 48 days.

(21) Appl. No.: **10/265,999**

(22) Filed: **Oct. 7, 2002**

(65) **Prior Publication Data**

US 2004/0146393 A1 Jul. 29, 2004

(51) **Int. Cl.**[7] **F01D 21/00**
(52) **U.S. Cl.** **415/200**; 419/9
(58) **Field of Search** 415/9, 200, 173.4, 415/174.4, 222, 135, 173.5–7

(56) **References Cited**

U.S. PATENT DOCUMENTS

4,085,012 A		4/1978	Marceau et al.	
4,127,451 A		11/1978	Marceau et al.	
4,140,433 A		2/1979	Eckel	
4,345,874 A		8/1982	Ozeki et al.	
4,377,370 A		3/1983	Porcelli	
4,534,698 A		8/1985	Tomich	
4,547,122 A		10/1985	Leech	
4,599,042 A		7/1986	Colliver	
4,699,567 A		10/1987	Stewart	
4,925,365 A	*	5/1990	Crozet et al.	415/173.6
5,151,311 A	*	9/1992	Parente et al.	428/116
5,160,248 A		11/1992	Clarke	
5,259,724 A		11/1993	Liston et al.	
5,344,280 A		9/1994	Langenbrunner et al.	
5,403,148 A		4/1995	Forrester	
5,408,826 A		4/1995	Stewart et al.	
5,411,370 A		5/1995	Varsik	
5,431,532 A		7/1995	Humke et al.	
5,437,538 A		8/1995	Mitchell	
5,447,411 A		9/1995	Curley et al.	
5,454,690 A		10/1995	Wolfe et al.	
5,482,429 A		1/1996	Penda	
5,483,792 A		1/1996	Czachor et al.	
5,516,257 A		5/1996	Kasprow et al.	
5,516,258 A		5/1996	Newton	
5,594,216 A	*	1/1997	Yasukawa et al.	181/213
5,627,222 A	*	5/1997	Recker et al.	523/400
5,662,457 A	*	9/1997	Bechtel et al.	415/135
5,690,469 A		11/1997	Deal et al.	
5,765,993 A		6/1998	Weiss	
5,945,356 A	*	8/1999	Pott	442/57
6,044,810 A		4/2000	Surridge	
6,059,524 A		5/2000	Costa et al.	
6,187,411 B1	*	2/2001	Palmer	428/102
6,282,786 B1		9/2001	Evans et al.	
6,287,080 B1		9/2001	Evans et al.	
6,290,455 B1	*	9/2001	Hemmelgarn et al.	415/9
6,450,450 B1	*	9/2002	MacDonald et al.	244/126

* cited by examiner

Primary Examiner—Edward K. Look
Assistant Examiner—J. M. McAleenan
(74) *Attorney, Agent, or Firm*—Lonathan P. Miller; Carmen Santa Maria; McNees Wallace & Nurick LLC

(57) **ABSTRACT**

A jet aircraft fan case containment design that uses polyurethane to absorb fan blade fragments and uses polyurethane to prevent fan blade fragments from penetrating the fan case. The polyurethane is used in place of or to supplement KEVLAR® and/or fiberglass wraps used to contain fan blade fragments. The polyurethane is also used in place of aluminum alloy and stiffening ribs in the fan case.
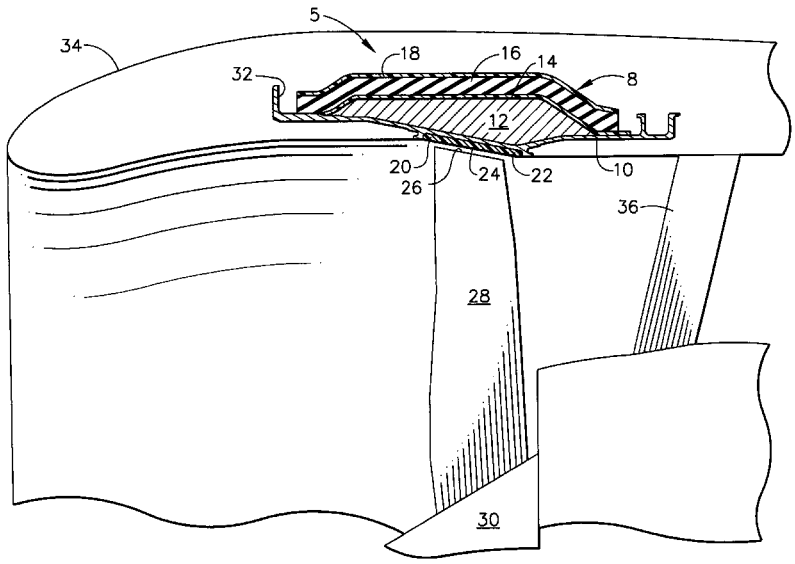
21 Claims, 2 Drawing Sheets