S. ELLIOTT.

APPARATUS FOR MOISTENING STENCIL BLANKS.

APPLICATION FILED SEPT. 16, 1915.

1,210,441.

Patented Jan. 2, 1917.

2 SHEETS—SHEET 1.

Fig. 1.

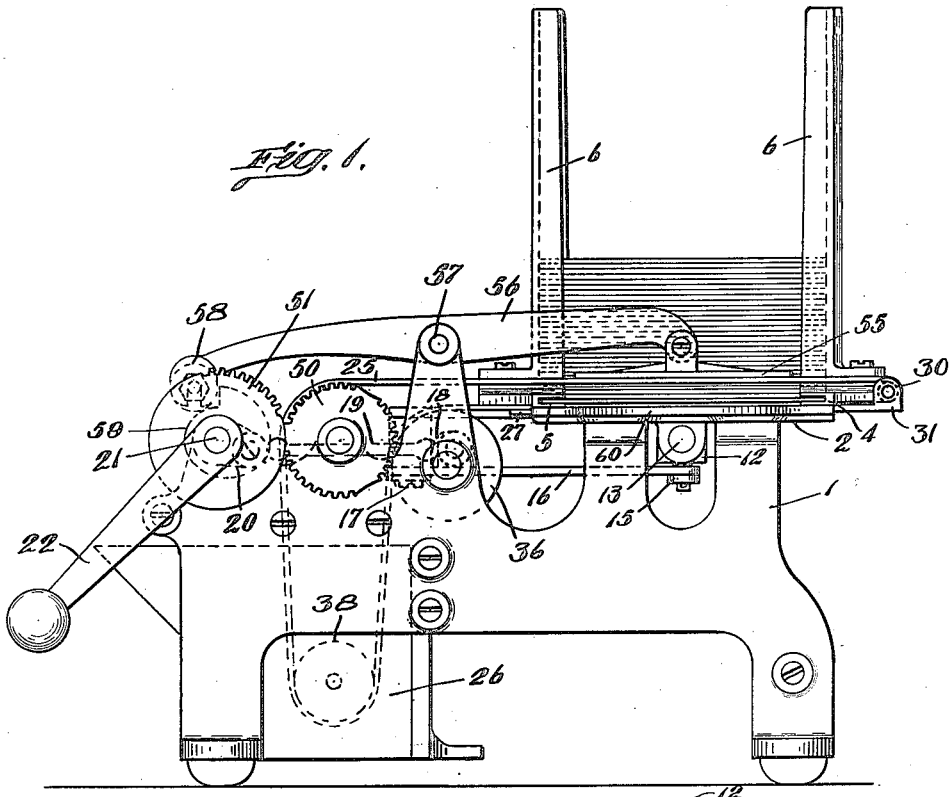

Fig. 2.

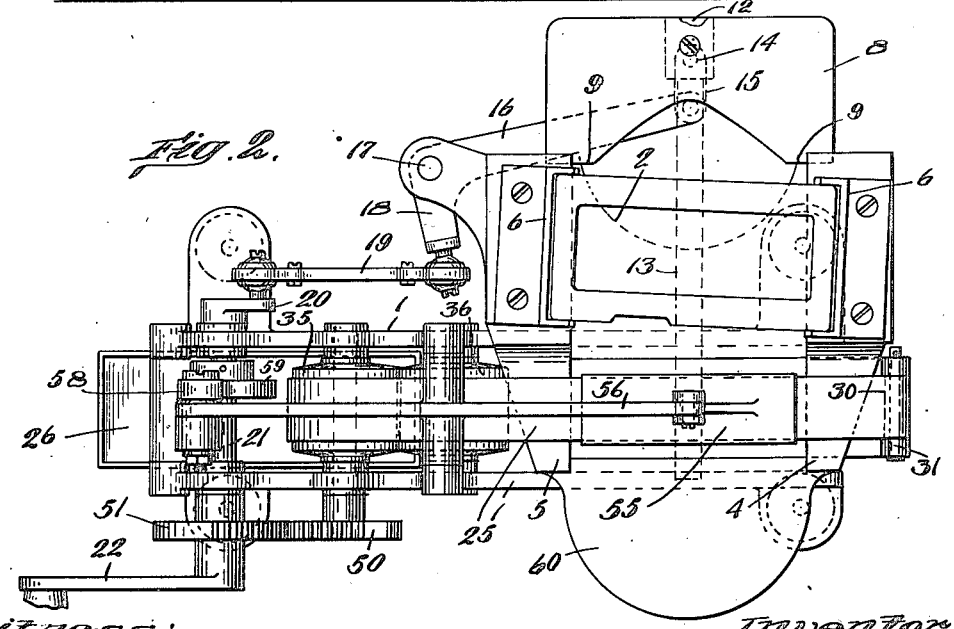

Witness:
H. B. Davis.

Inventor:
Sterling Elliott.
By Noyes & Harrison
Attys