Sept. 28, 1948. K. A. KAIL 2,450,240

RADIO DIRECTION FINDING MEANS FOR AVIATION TRAINERS

Original Filed July 30, 1943 2 Sheets-Sheet 1

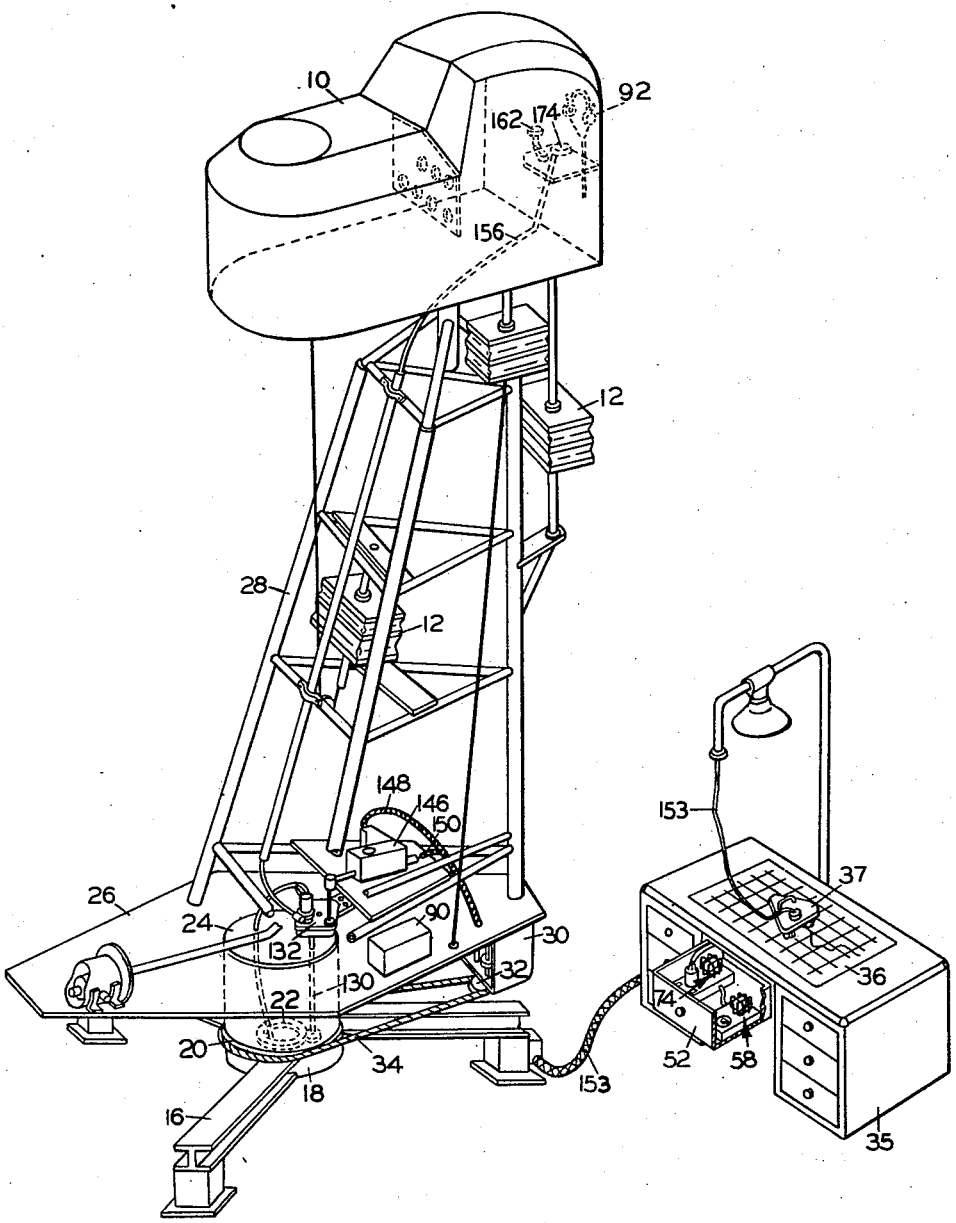

FIG. 1

KARL A. KAIL
INVENTOR.

BY Donald T. Hillier
Philip S. Hopkins
ATTORNEYS