March 10, 1953 R. A. ROBERT ET AL 2,630,740

APPARATUS FOR LAUNCHING ROCKET BOMBS FROM AIRCRAFT

Filed Oct. 22, 1949 5 Sheets-Sheet 1

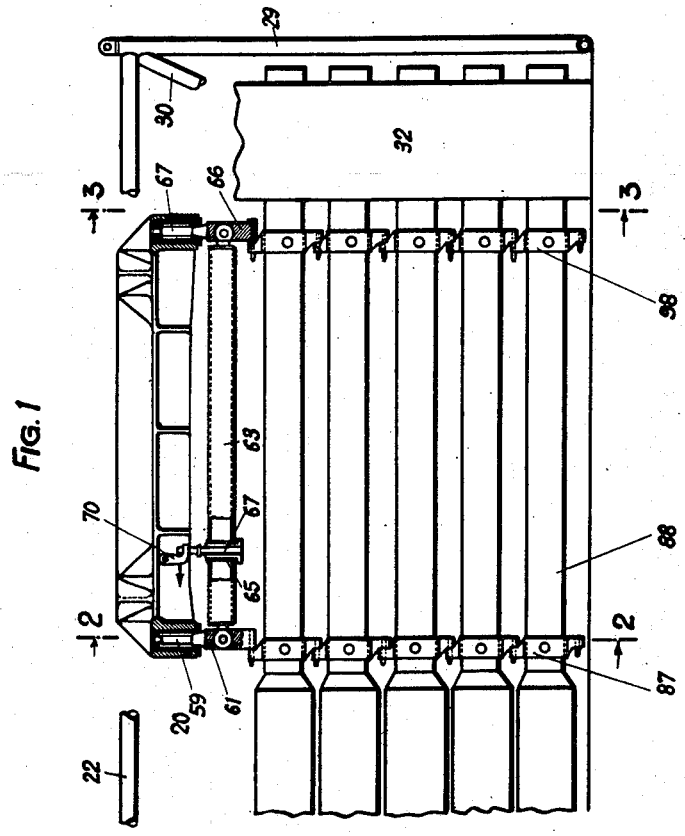

FIG. 1

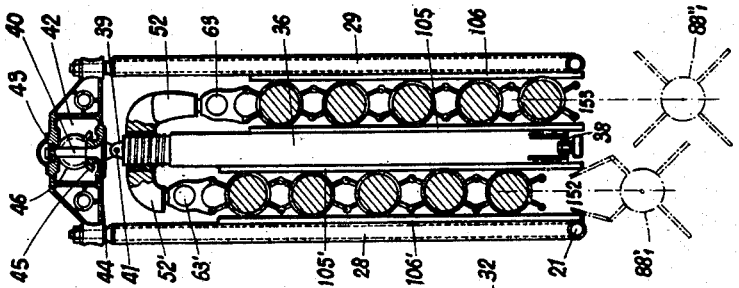

FIG. 2

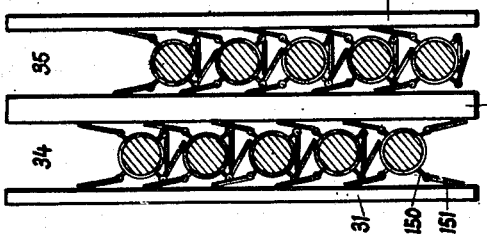

FIG. 3

INVENTORS:
ROGER AIME ROBERT
PIERRE PAUL MATGE
By: Haseltine, Lake & Co.
AGENTS