US005906540A

United States Patent [19]

Grandin

[11] **Patent Number: 5,906,540**

[45] **Date of Patent: May 25, 1999**

[54] **ANIMAL STUNNING SYSTEM PRIOR TO SLAUGHTER**

[75] Inventor: **Temple Grandin**, Ft. Collins, Colo.

[73] Assignee: **Monfort, Inc.**, Greeley, Colo.

[21] Appl. No.: **09/012,891**

[22] Filed: **Jan. 23, 1998**

[51] **Int. Cl.**[6] **A22B 3/06**

[52] **U.S. Cl.** **452/58**

[58] **Field of Search** 452/58, 57, 54

[56] **References Cited**

U.S. PATENT DOCUMENTS

2,621,362	12/1952	Cosden	452/58
2,879,539	3/1959	Cervin	452/58
3,599,276	8/1971	Edwards .	
3,657,767	4/1972	Schmidt, Jr. .	
4,031,591	6/1977	Collins .	
4,338,700	7/1982	Nijhuis .	
4,361,932	12/1982	Nijhuis .	
4,524,487	6/1985	Goossens .	
4,531,322	7/1985	Termet .	
4,571,777	2/1986	Nijhuis .	
4,575,900	3/1986	Hamel et al. .	
4,578,841	4/1986	Nijhuis .	
4,586,216	5/1986	Grajoszex .	
4,747,184	5/1988	Winsloe .	
4,747,185	5/1988	Thacker .	
4,780,932	11/1988	Bowman et al. .	
4,875,253	10/1989	Lambooy .	
4,953,263	9/1990	Lambooy .	
5,326,307	7/1994	Bernardus et al.	452/58
5,401,209	3/1995	Ripol et al.	452/58
5,486,145	1/1996	Dorsthorst et al.	452/58
5,595,444	1/1997	Tong et al.	374/45
5,704,830	1/1998	Van Ochten	452/58

FOREIGN PATENT DOCUMENTS

177787	4/1986	European Pat. Off.	452/58

Primary Examiner—Willis Little
Attorney, Agent, or Firm—Sheridan Ross P.C.

[57] **ABSTRACT**

An electronic animal stunning system is disclosed, wherein animals can be continuously stunned while being moved through a stunning passageway, and wherein the current for the stunning process utilizes a series of electrodes for sequentially contacting the animal to be stunned and providing the stunning current. In particular, a series of pivotally mounted overhead electrode paddles are provided, wherein each paddle in the series of paddles pivots when contacted by the animal's head and slides across the face of the animal's head thereby setting up an electric current through the animal's head. The present invention is particularly useful for the slaughtering of hogs.
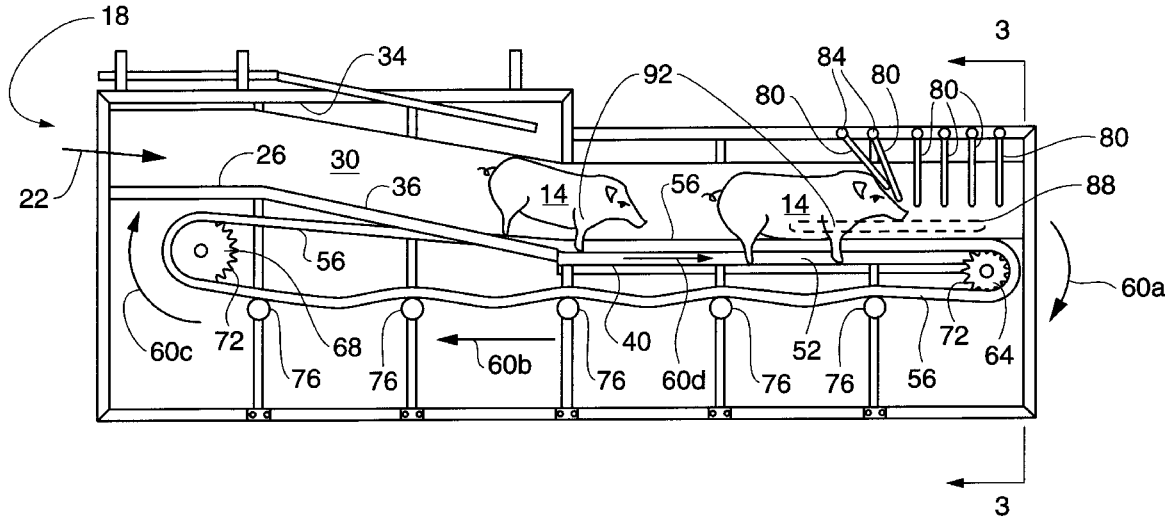
8 Claims, 3 Drawing Sheets