Jan. 1, 1957 W. F. BLAMEY, JR., ET AL 2,776,139

GAME BALL

Filed Feb. 18, 1954

Fig. 1.

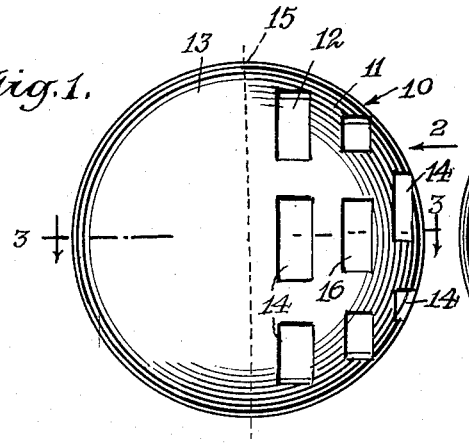

Fig. 2.

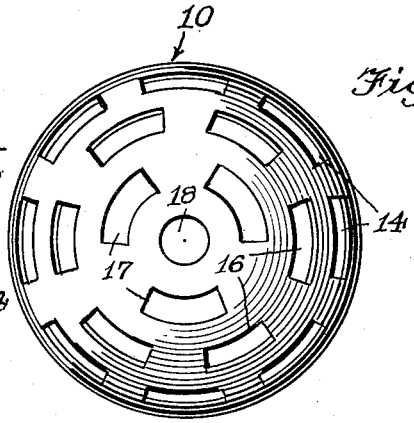

Fig. 3.

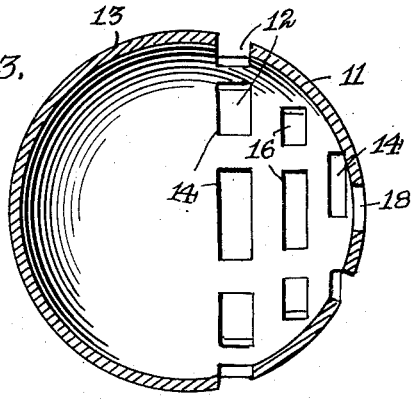

Fig. 4.

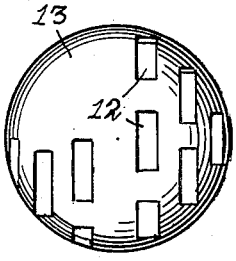

Fig. 5.

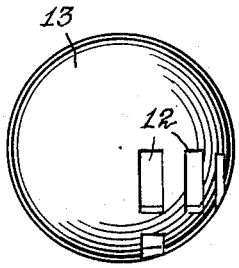

Fig. 6.

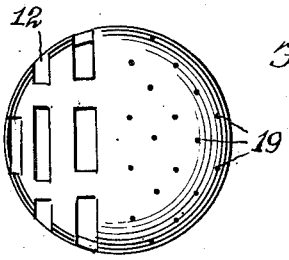

INVENTORS
William F. Blamey Jr
and David N. Mullany
By Sylvester G. Liddy +
Arthur L. Nathanson
ATTORNEYS