PHOTOVOLTAIC GENERATOR

Filed Oct. 23, 1962 4 Sheets-Sheet 1

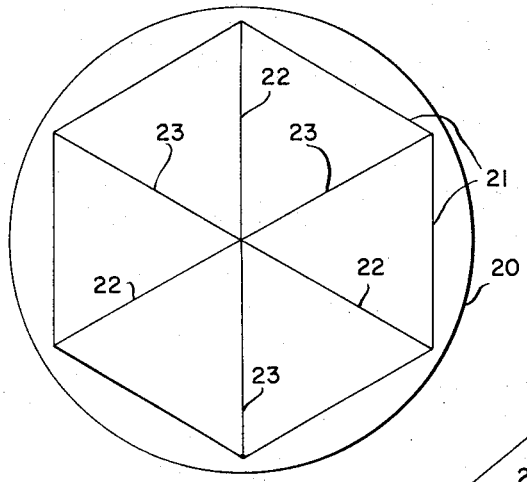

Fig. 1.

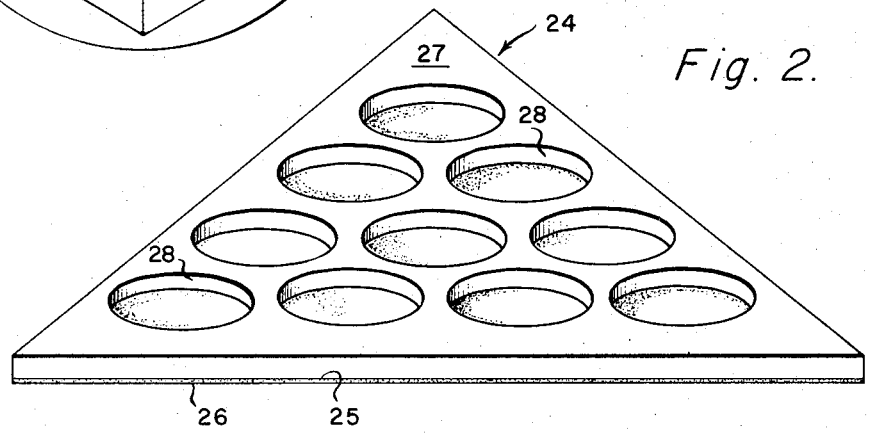

Fig. 2.

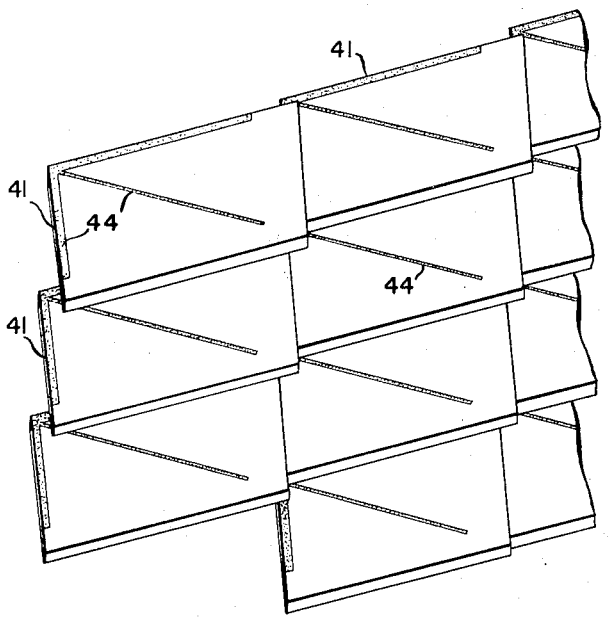

Fig. 7.

Jon H. Myer,
INVENTOR.
BY.
Charles A. Haughey
ATTORNEY.