Sept. 28, 1948. K. A. KAIL 2,450,239

AVIATION TRAINER

Filed July 29, 1942 4 Sheets-Sheet 1

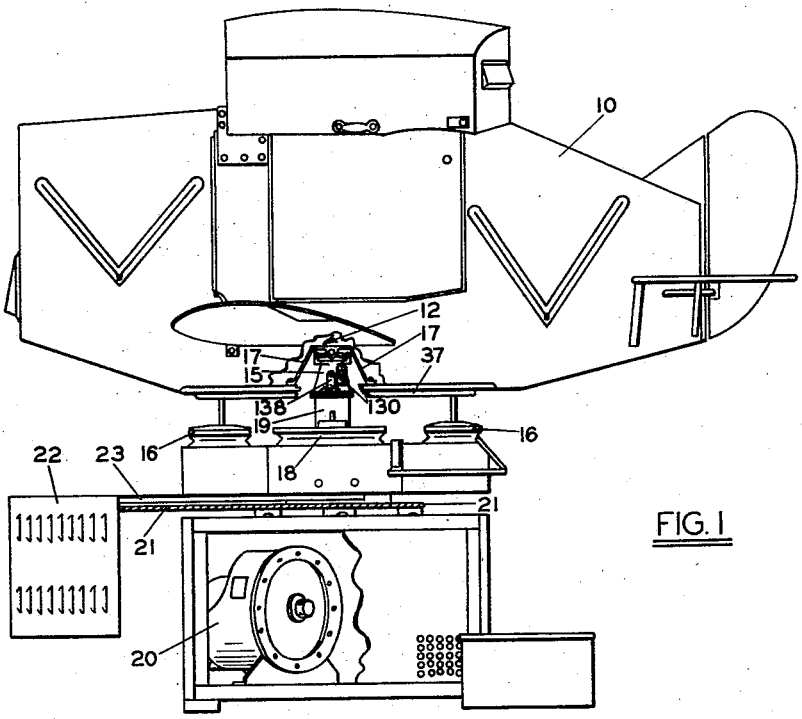

FIG. 1

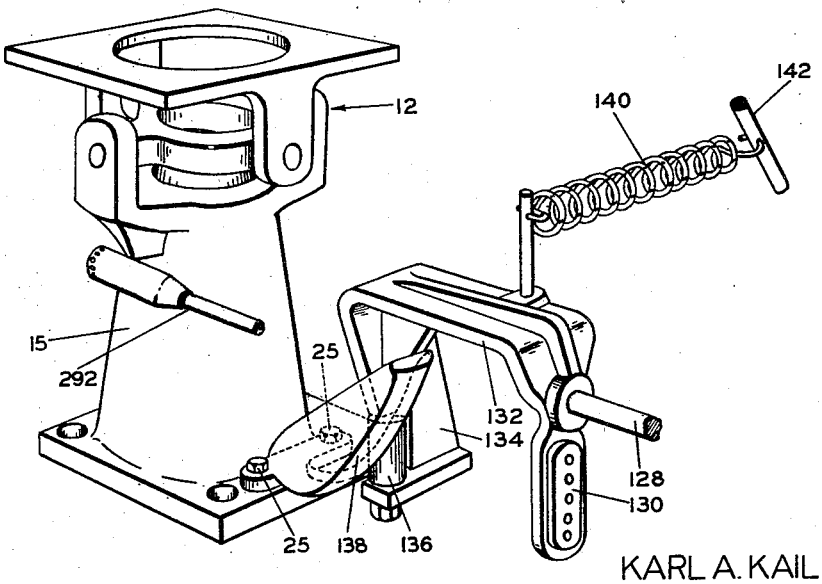

FIG. 2

KARL A. KAIL
INVENTOR.

BY Donald V. Hillier
ATTORNEY