July 7, 1936. H. F. PHILLIPS ET AL 2,046,839

SCREW

Filed Jan. 15, 1935

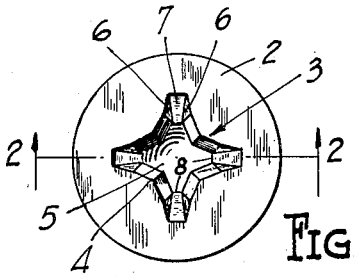

FIG. 1

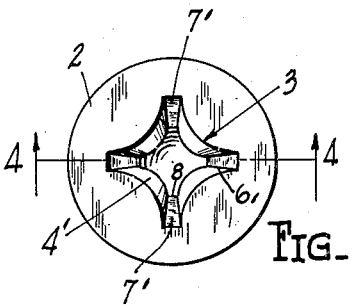

FIG. 3.

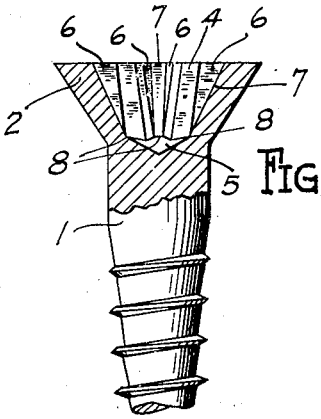

FIG. 2.

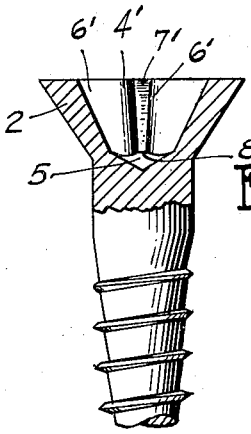

FIG. 4.

HENRY F. PHILLIPS
AND THOMAS M. FITZPATRICK
INVENTORS

BY James D. Givnan
ATTORNEYS.