July 14, 1953 D. T. THOMPSON 2,645,539

FOLDING TABLE, TENNIS TABLE OR THE LIKE

Filed May 6, 1950

Fig. 1

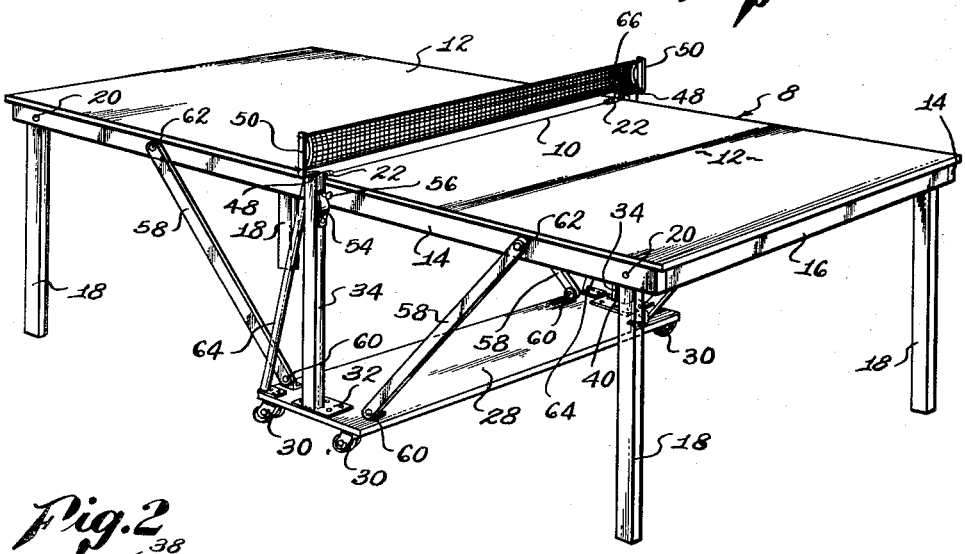

Fig. 2

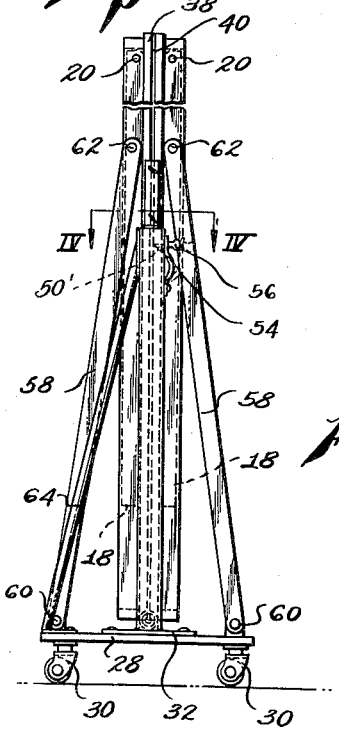

Fig. 3

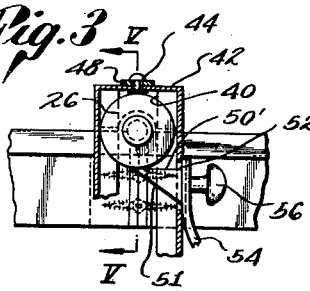

Fig. 5

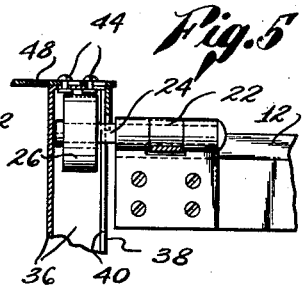

Fig. 4

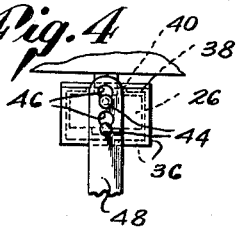

Fig. 6

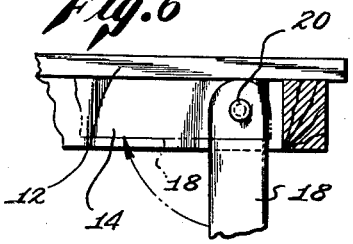

INVENTOR.
DANIEL T. THOMPSON
BY Wm Edward Hanna
Attorney