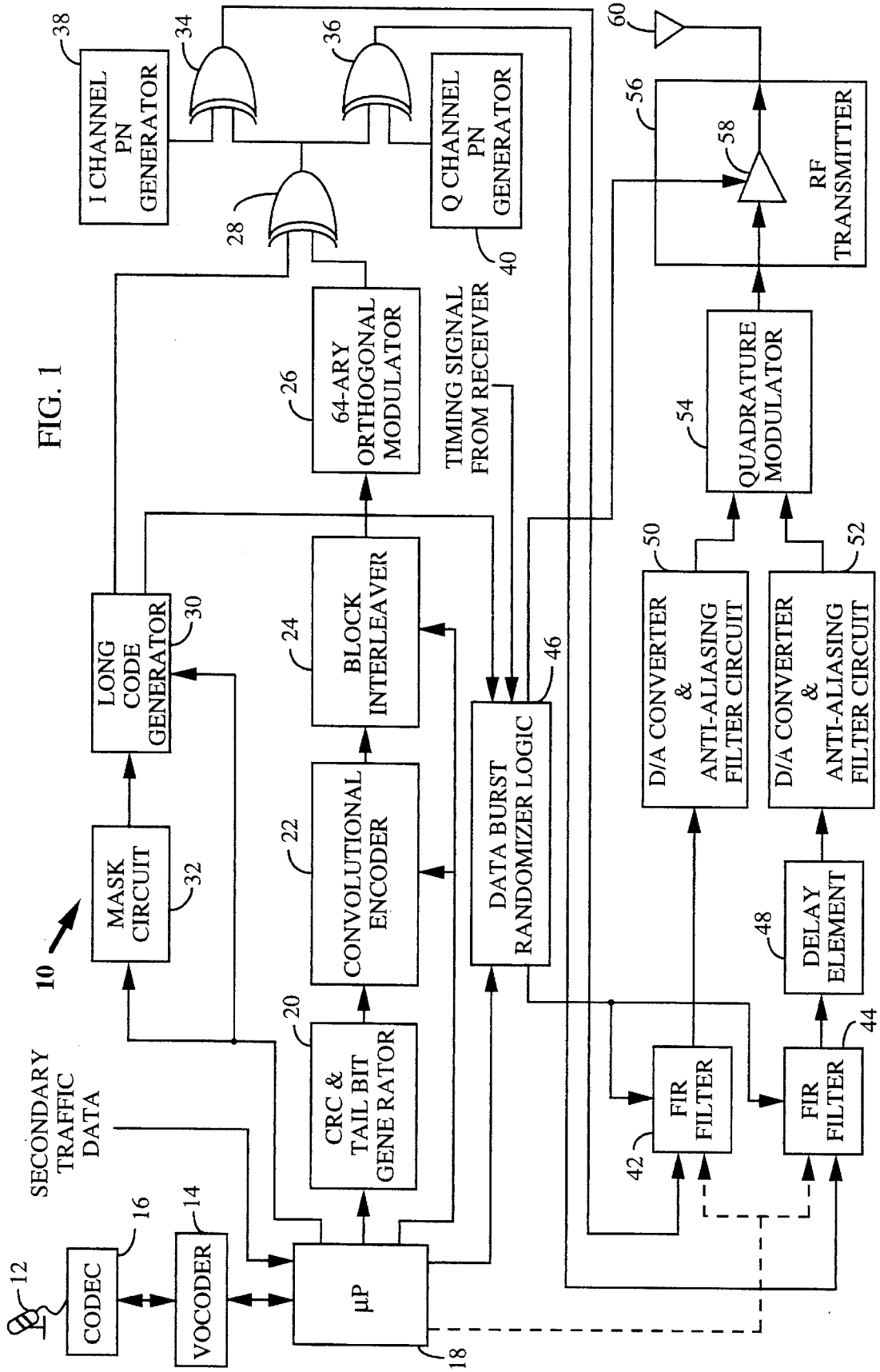
10
12
CODEC
16
VOCODER
14
SECONDARY TRAFFIC DATA
µP
18
CRC & TAIL BIT GENERATOR
20
CONVOLUTIONAL ENCODER
22
BLOCK INTERLEAVER
24
64-ARY ORTHOGONAL MODULATOR
26
MASK CIRCUIT
32
LONG CODE GENERATOR
30
28
I CHANNEL PN GENERATOR
38
34
36
Q CHANNEL PN GENERATOR
40
TIMING SIGNAL FROM RECEIVER
DATA BURST RANDOMIZER LOGIC
46
FIR FILTER
42
FIR FILTER
44
DELAY ELEMENT
48
D/A CONVERTER & ANTI-ALIASING FILTER CIRCUIT
50
D/A CONVERTER & ANTI-ALIASING FILTER CIRCUIT
52
QUADRATURE MODULATOR
54
RF TRANSMITTER
56
58
60

FIG. 1