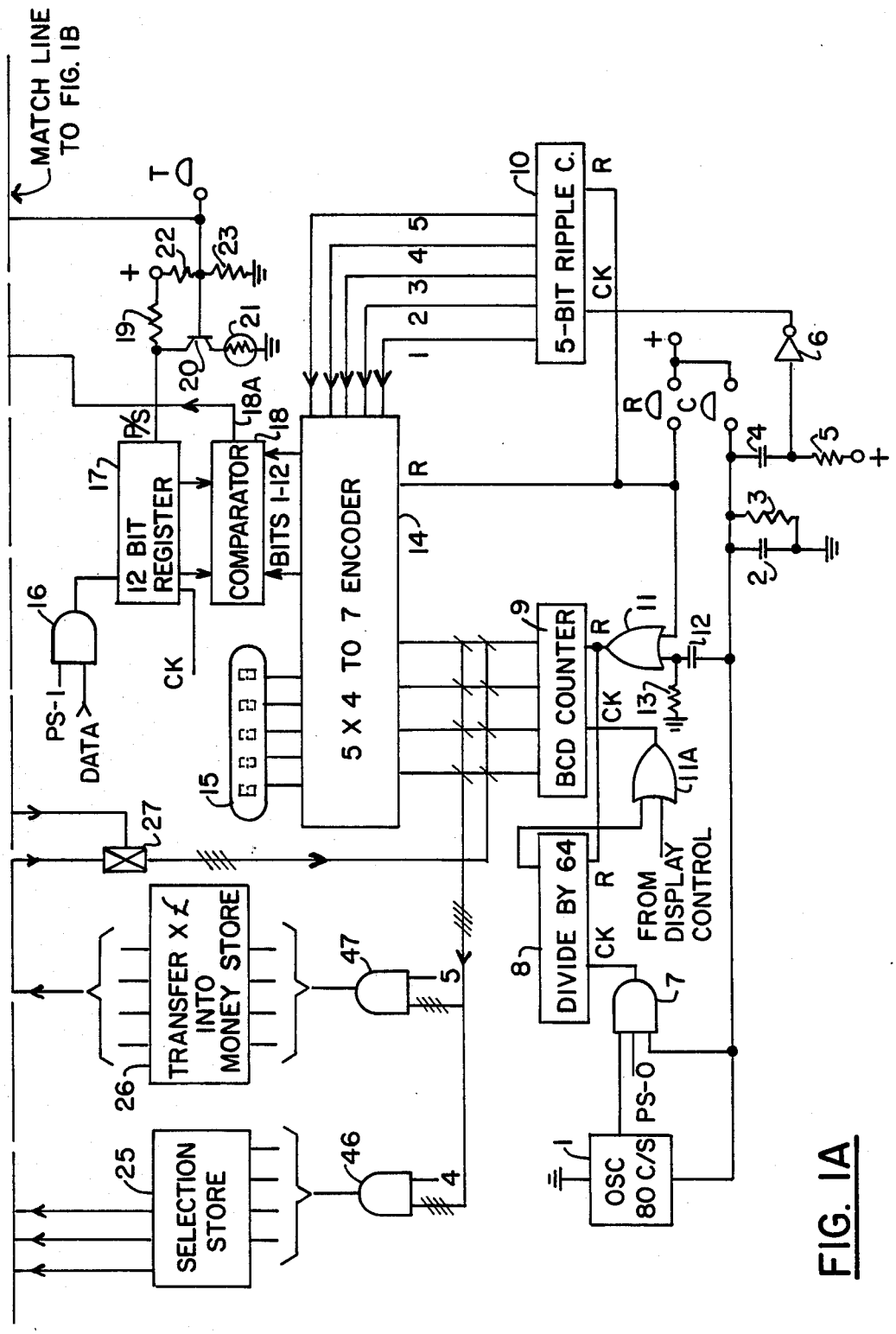
MATCH LINE TO FIG. 1B
T
+
22
23
19
21
20
18A
18
P/S
17
12 BIT REGISTER
COMPARATOR
BITS 1-12
16
PS-1
DATA
CK
15
5 X 4 TO 7 ENCODER
14
R
1
2
3
4
5
10
5-BIT RIPPLE C.
R
CK
6
R
C
4
5
3
2
9
BCD COUNTER
R
CK
11
12
13
11A
FROM DISPLAY CONTROL
8
DIVIDE BY 64
R
CK
7
PS-0
1
OSC 80 C/S
27
TRANSFER X £ INTO MONEY STORE
26
47
5
SELECTION STORE
25
46
4

FIG. 1A