No. 12,037. Reissued Sept. 30, 1902.

T. A. EDISON.

KINETOSCOPE.

(Application filed June 10, 1902.)

3 Sheets—Sheet 1.

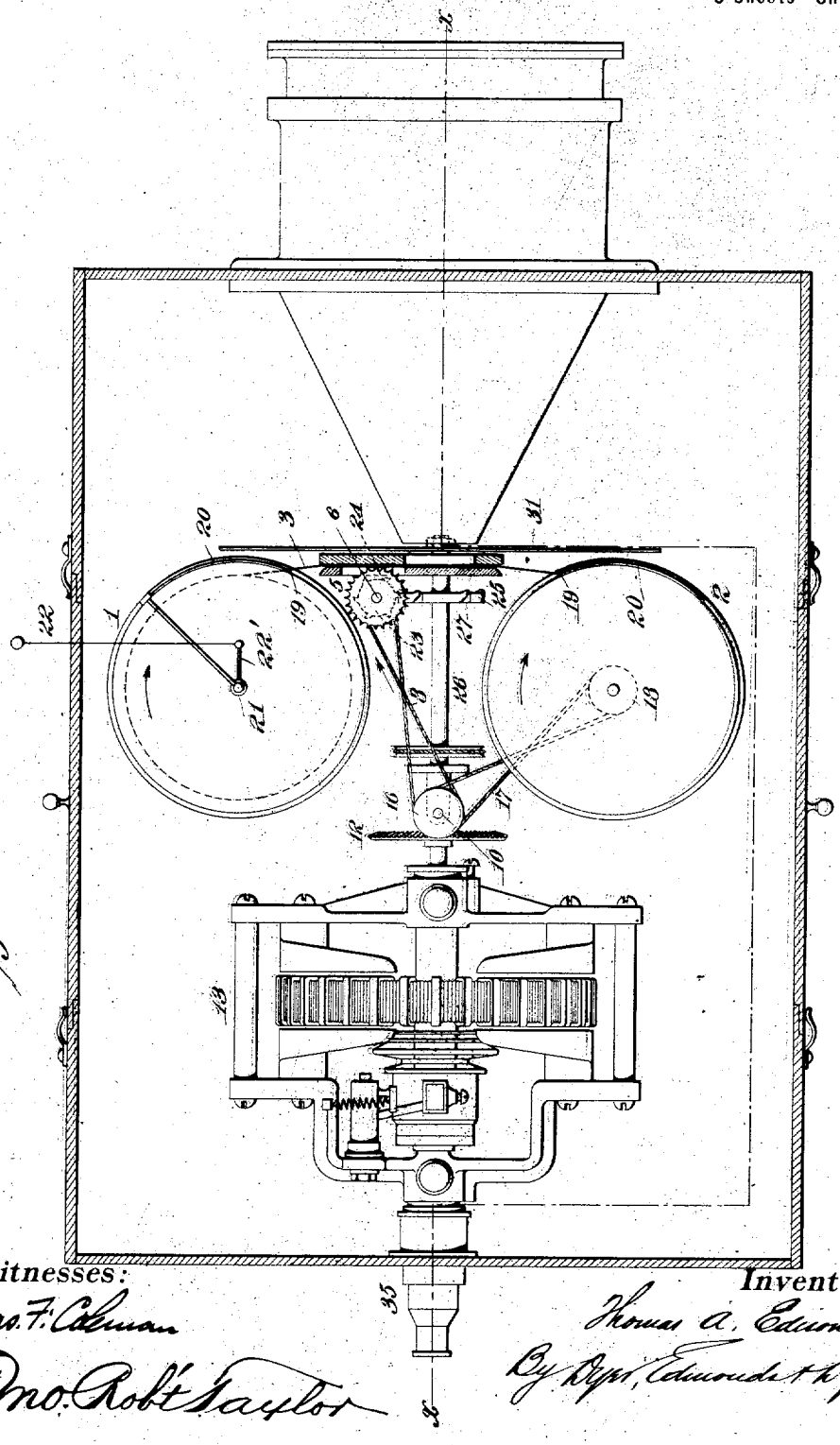

Witnesses:

Jas. F. Coleman

Jno. Robt Taylor

Inventor

Thomas A. Edison

By Dyer, Edmonds & Dyer

Att'ys.