Feb. 26, 1924. 1,485,336

J. R. PADESKY

PRESSURE GAUGE

Filed July 30, 1923

Fig. 1.

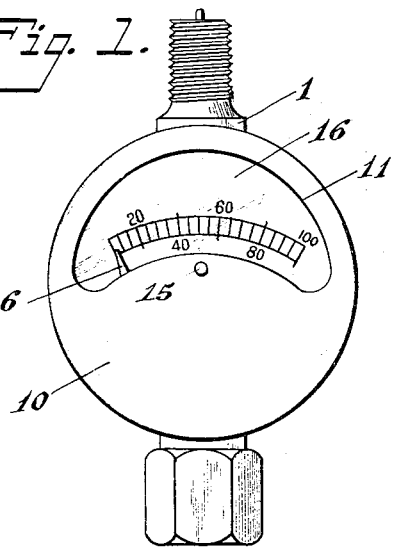

Fig. 2.

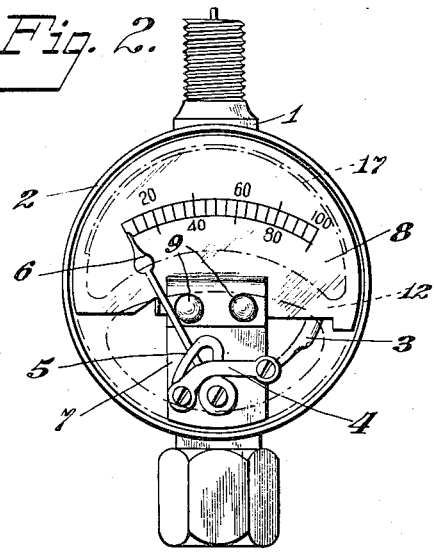

Fig. 3.

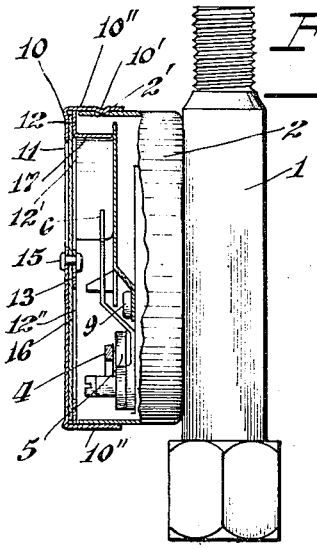

Fig. 4.

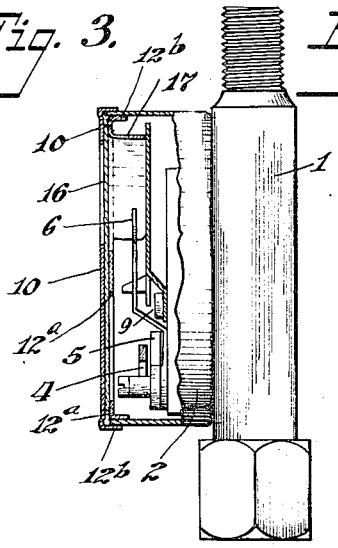

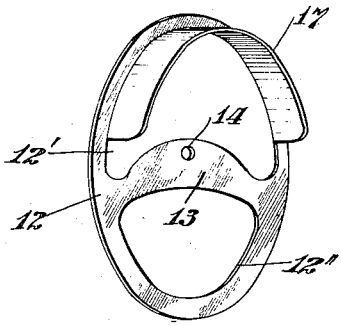

Fig. 6.

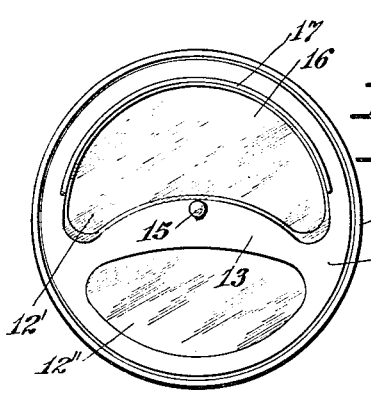

Fig. 5.

Inventor

John R. Padesky

By Stacy & Bowman

Attorneys