May 20, 1958 L. P. PERESENYI 2,835,036

FOOTBALL YARDAGE TELESCOPE

Filed Oct. 3, 1955 2 Sheets-Sheet 1

FIG_1

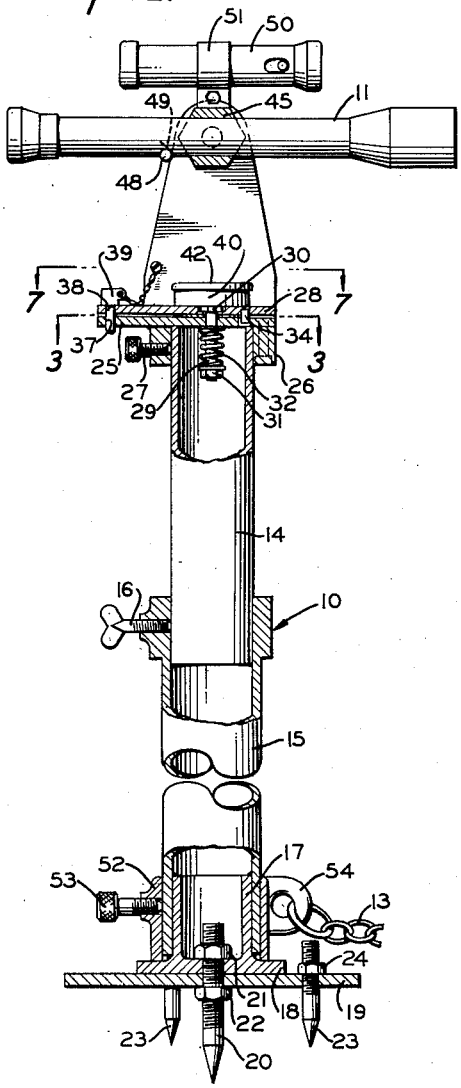

FIG_2

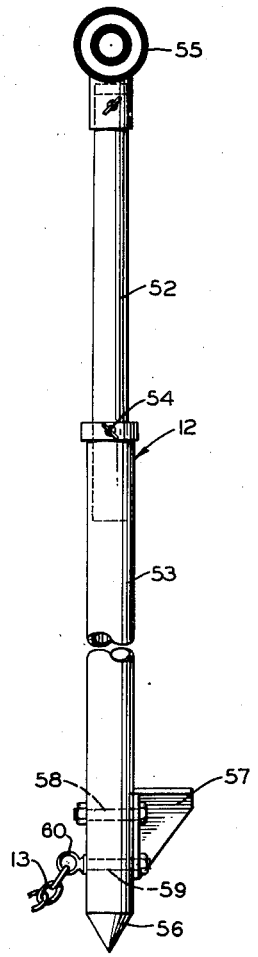

FIG_3

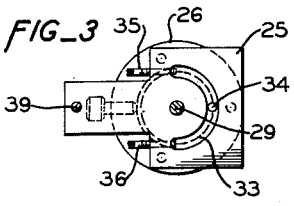

INVENTOR.
LOUIS P. PERESENYI
BY Mellin and Hanson
ATTORNEYS