33-258. OR 1,834,636 SR

Search Room

Dec. 1, 1931. J. D. PEDERSEN 1,834,636

REAR SIGHT MECHANISM FOR SMALL ARMS

Original Filed June 9, 1927

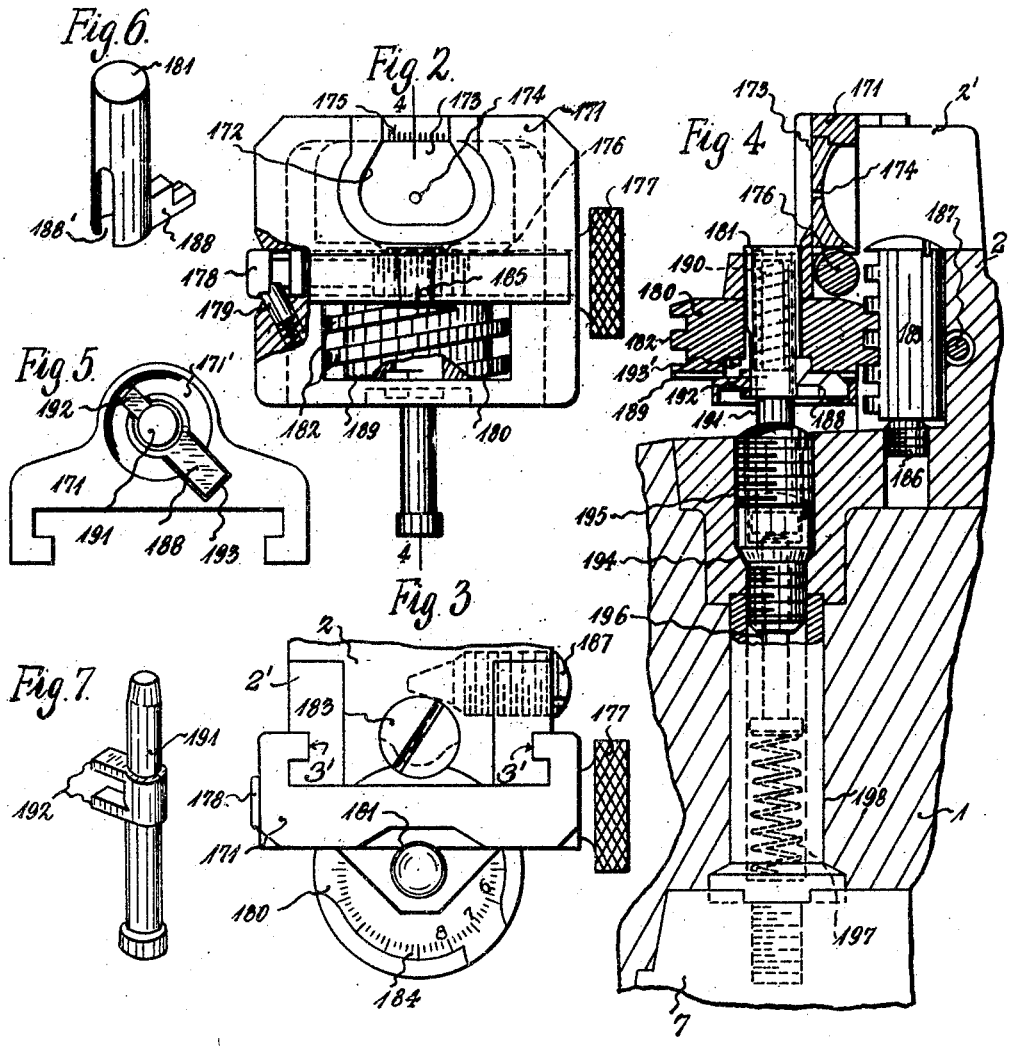

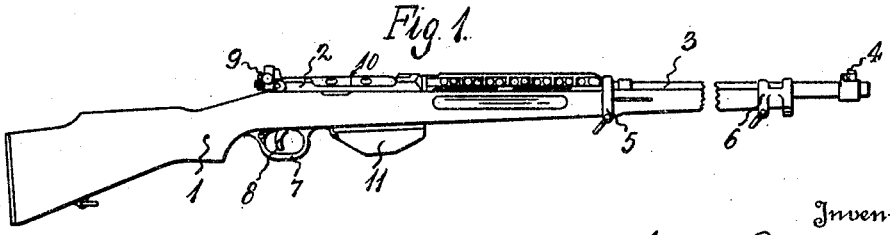

Inventor

John D. Pedersen

By Chapin & Neal

Attorney

1584

1446
2 P