US006661035B2

(12) **United States Patent**
Negro et al.

(10) **Patent No.: US 6,661,035 B2**
(45) **Date of Patent: Dec. 9, 2003**

(54) **LASER DEVICE BASED ON SILICON NANOSTRUCTURES**

(75) Inventors: **Luca Dal Negro**, Verona (IT); **Giorgia Franzo'**, San Giovanni La Punta (IT); **Zeno Gaburro**, Verona (IT); **Fabio Iacona**, Aci Castello (IT); **Lorenzo Pavesi**, Trento (IT); **Francesco Priolo**, San Giovanni La Punta (IT)

(73) Assignees: **INFM Instituto Nazionale per la Fisica Della Materia**, Geneva (IT); **Universita'Degli Studi di Trento**, Trento (IT); **Universita'Degli Studi di Catania**, Catania (IT); **Consiglio Nazionale Della Ricerche**, Roma (IT)

(*) Notice: Subject to any disclaimer, the term of this patent is extended or adjusted under 35 U.S.C. 154(b) by 0 days.

(21) Appl. No.: **09/989,456**

(22) Filed: **Nov. 21, 2001**

(65) **Prior Publication Data**

US 2002/0163003 A1 Nov. 7, 2002

(30) **Foreign Application Priority Data**

May 7, 2001 (IT) TO201A424

(51) **Int. Cl.**[7] **H01L 29/88**; H01L 29/861; H01S 5/00; H01S 3/091

(52) **U.S. Cl.** **257/105**; 372/43; 372/70

(58) **Field of Search** 372/43, 70; 257/103

(56) **References Cited**

U.S. PATENT DOCUMENTS

5,757,837 A * 5/1998 Lim et al. 372/43
5,852,346 A 12/1998 Komoda et al.
6,067,307 A * 5/2000 Krishnamoorthy 372/26

OTHER PUBLICATIONS

Gritsenko et al., Silicon nanocluster in silicon nitride: PL, Raman scattering and ESR studies, vol. 8, 1997, pp. 196–199, IEEE.*

T. Baron et al, Silicon quatum dot nucleation on Si3N4, SiO2 and SiOxNy substrates for nanoelectronic devices, Journal of Crystal growth, 209, (2000) 1004–1008.*

Streetman (Solid State Electronic Devices, 4th edition, pp. 384–390).*

L. Pavesi, et al., "Optical gain in silicon nanocrystals" *Nature* vol. 408, pp. 440–444, Nov. 2000.

K. D. Hirschman, et al., "Silicon–based visible light emitting devices integrated into microelectronic circuits" *Nature*, vol. 384, pp. 338–340, (1996).

L. T. Canham "Silicon quantum wire array fabrication by electrochemical and chemical dissolution of wafers", *Appl. Phys. Lett.*, vol. 57, pp. 1045–1048, (1990).

* cited by examiner

Primary Examiner—Steven Loke
Assistant Examiner—Samuel A Gebremariam
(74) *Attorney, Agent, or Firm*—Sughrue Mion, PLLC

(57) **ABSTRACT**

A silicon-based light-emitting device is described and comprises an active region, an excitation system which can bring about a condition of inversion of the population of carriers within the active region, and semi-reflective elements which can define a resonant optical structure in which the active region is inserted so as to bring about stimulated emission of coherent light. The active region comprises silicon nanostructures immersed in a silicon-dioxide-based dielectric matrix.
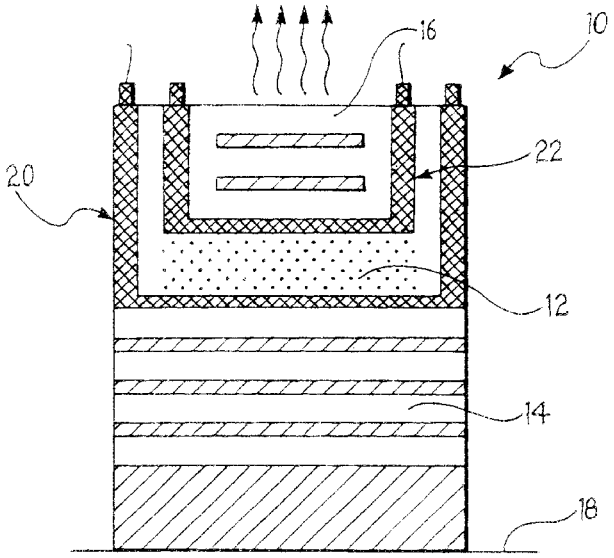
23 Claims, 2 Drawing Sheets