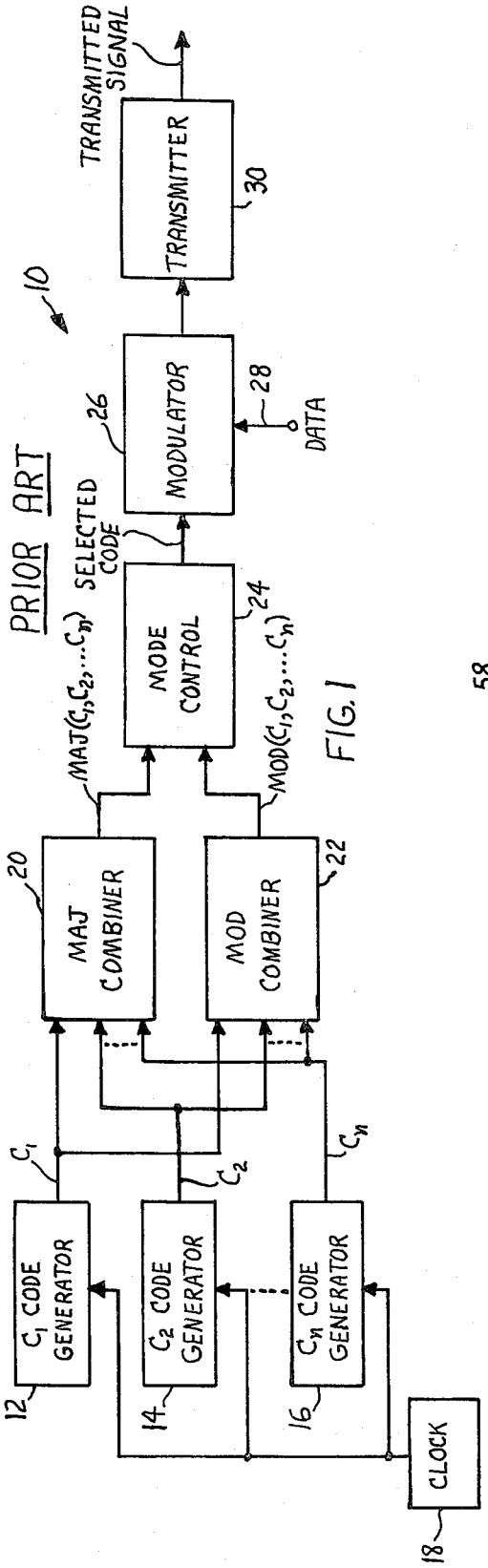
PRIOR ART
10
TRANSMITTED SIGNAL
TRANSMITTER
30
MODULATOR
26
28
DATA
SELECTED CODE
MODE CONTROL
24
MAJ(C1,C2,...Cn)
MOD(C1,C2,...Cn)
MAJ COMBINER
20
MOD COMBINER
22
C1
C2
Cn
C1 CODE GENERATOR
12
C2 CODE GENERATOR
14
Cn CODE GENERATOR
16
CLOCK
18

FIG. 1

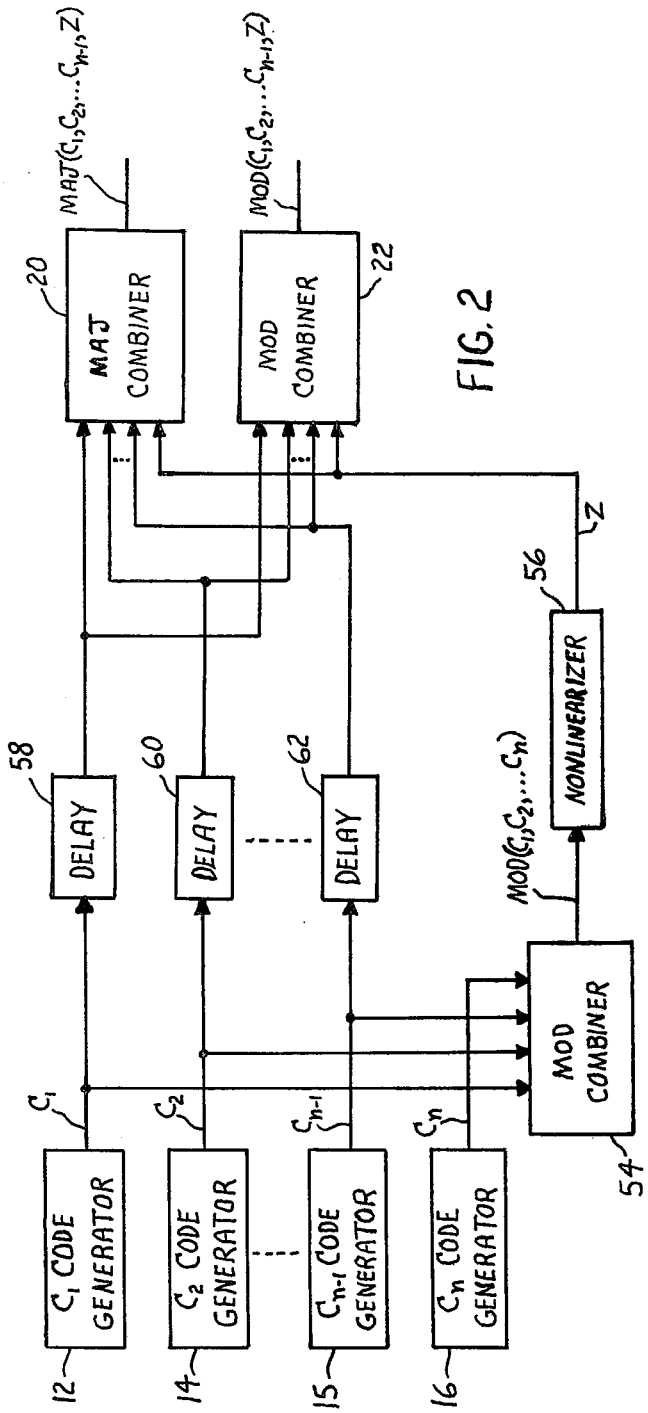
MAJ(C1,C2,...Cn-1,Z)
MOD(C1,C2,...Cn-1,Z)
MAJ COMBINER
20
MOD COMBINER
22
Z
NONLINEARIZER
56
DELAY
58
DELAY
60
DELAY
62
MOD(C1,C2,...Cn)
MOD COMBINER
54
C1
C2
Cn-1
Cn
C1 CODE GENERATOR
12
C2 CODE GENERATOR
14
Cn-1 CODE GENERATOR
15
Cn CODE GENERATOR
16

FIG. 2