US011120135B2

(12) **United States Patent**
Martino et al.

(10) **Patent No.: US 11,120,135 B2**
(45) **Date of Patent: Sep. 14, 2021**

(54) **UPDATING SECURITY INFORMATION ON MULTIPLE COMPUTING MACHINES**

(71) Applicant: **INTERNATIONAL BUSINESS MACHINES CORPORATION**, Armonk, NY (US)

(72) Inventors: **Marco Martino**, Rome (IT); **Giuseppe Ciano**, Rome (IT); **Roberto Giordani**, Rome (IT); **Gianluca Bernardini**, Rome (IT); **Salvatore D'Angelo**, Fiumicino (IT); **Valeria Perticara'**, Rome (IT); **Roberto Piras**, Rome (IT); **Angelo Albanese**, Rome (IT)

(73) Assignee: **International Business Machines Corporation**, Armonk, NY (US)

(*) Notice: Subject to any disclaimer, the term of this patent is extended or adjusted under 35 U.S.C. 154(b) by 349 days.

(21) Appl. No.: **16/145,260**

(22) Filed: **Sep. 28, 2018**

(65) **Prior Publication Data**

US 2020/0104500 A1 Apr. 2, 2020

(51) **Int. Cl.**

G06F 21/57	(2013.01)
G06F 8/65	(2018.01)
G06F 21/62	(2013.01)
H04L 29/06	(2006.01)

(52) **U.S. Cl.**

CPC ***G06F 21/57*** (2013.01); ***G06F 8/65*** (2013.01); ***G06F 21/6209*** (2013.01); ***H04L 63/20*** (2013.01)

(58) **Field of Classification Search**

CPC G06F 21/57; G06F 8/65; G06F 21/6209; G06F 21/577; H04L 63/20

See application file for complete search history.

(56) **References Cited**

U.S. PATENT DOCUMENTS

7,607,164	B2	10/2009	Vasishth et al.	
8,266,674	B2	9/2012	Huang et al.	
8,429,642	B1 *	4/2013	Cheng	H04L 67/34 717/173
8,516,474	B2 *	8/2013	Lamba	H04L 67/34 717/172
8,745,715	B2	6/2014	Lindholm et al.	
9,420,065	B2 *	8/2016	Mayo	H04L 67/34
9,648,012	B1 *	5/2017	Machani	H04L 63/061
9,658,841	B2 *	5/2017	Krishna	G06F 8/65

(Continued)

OTHER PUBLICATIONS

Zhao, Hang, "Security Policy Definition and Enforcement in Distributed Systems", Columbia University, © 2012, 163 pages.

(Continued)

Primary Examiner — James R Turchen

(74) *Attorney, Agent, or Firm* — David Spalding

(57) **ABSTRACT**

A computing system comprises a plurality of computing machines, each computing machine storing security information corresponding with the respective computing machine. Embodiments are directed to receiving an update request by a current computing machine for updating corresponding security information, updating the corresponding security information, determining other computing machines coupled with the current computing machine, and submitting, by the current computing machine, a further update request to each other computing machine that is coupled with the current computing machine.
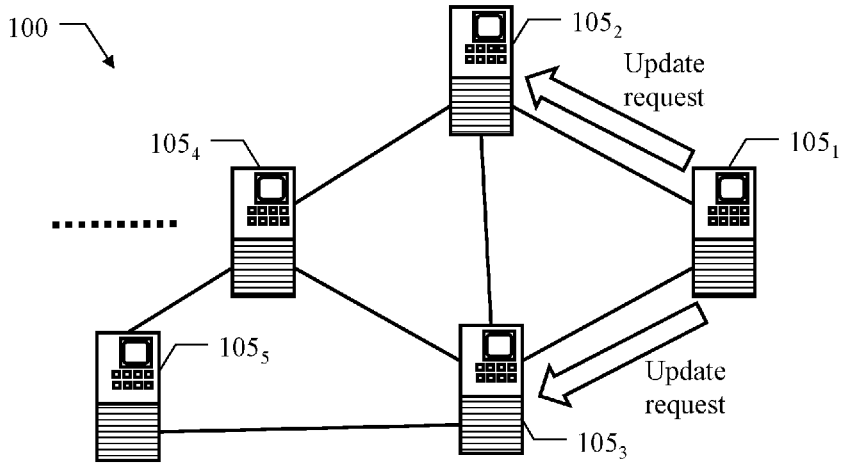
13 Claims, 6 Drawing Sheets