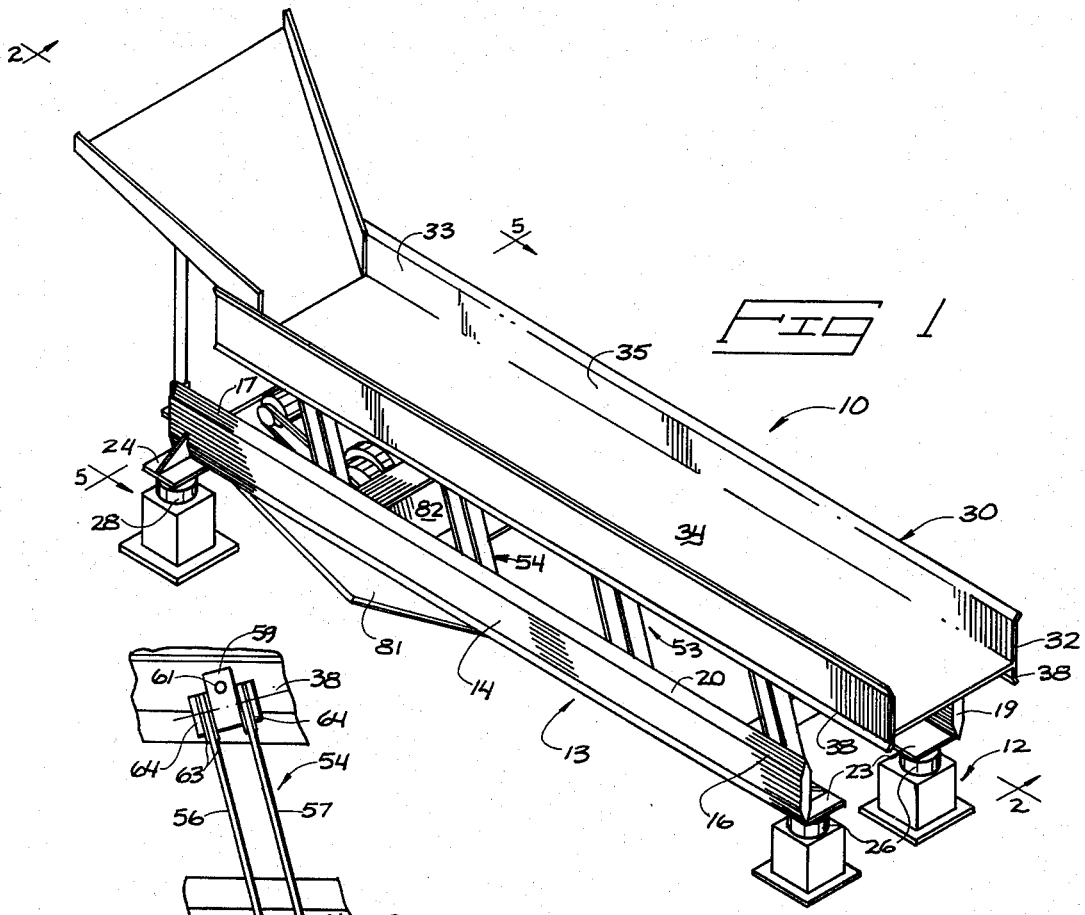

FIG 1

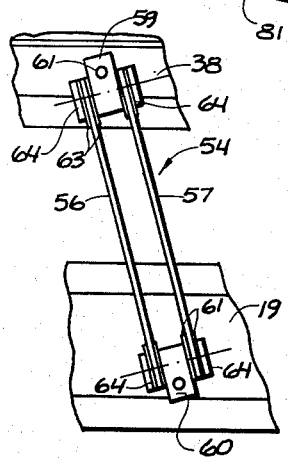

FIG 4

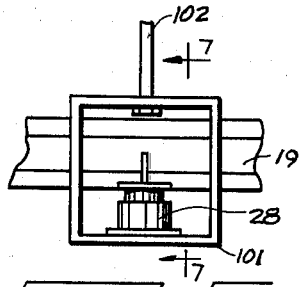

FIG 6

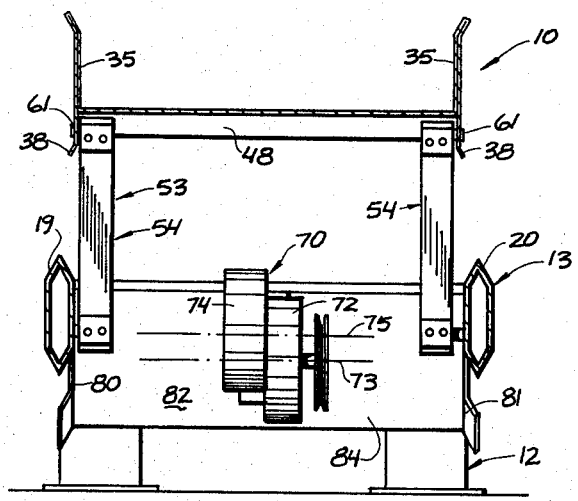

FIG 5

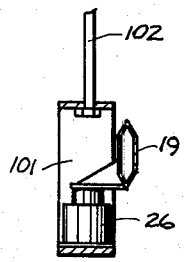

FIG 7