Feb. 15, 1955 J. H. GIBBON, JR., ET AL 2,702,035

OXYGENATING UNIT FOR EXTRACORPOREAL CIRCULATION DEVICES

Original Filed May 28, 1949 2 Sheets-Sheet 1

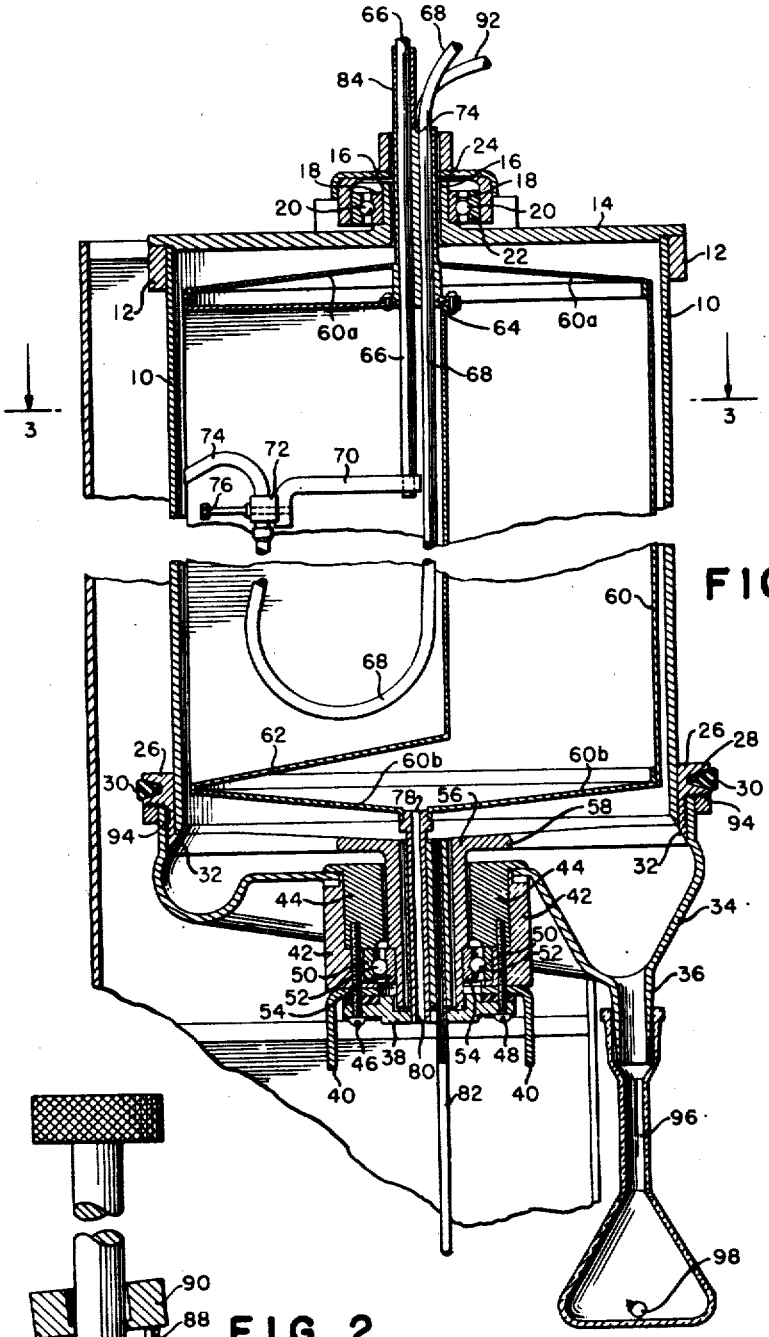

FIG. 1

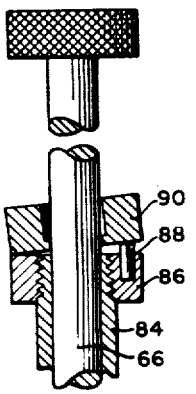

FIG. 2

INVENTORS
JOHN H. GIBBON JR., GUSTAV V.A. MALMROS, EDMUND A. BARBER JR.
BY Robert S. Dunham
ATTORNEY