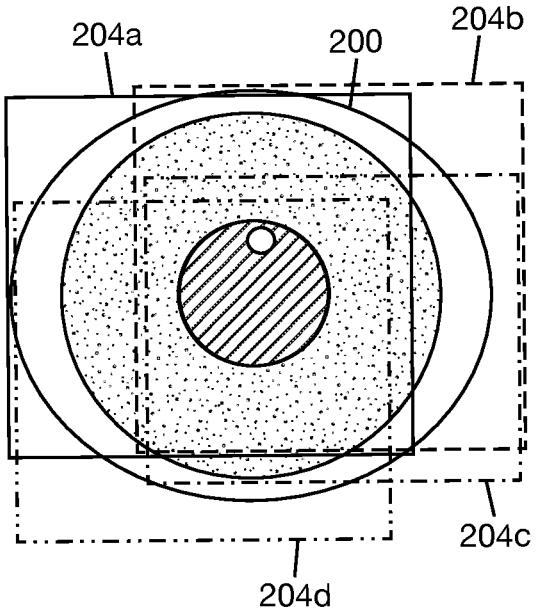
204a
200
204b
204c
204d

FIG. 2

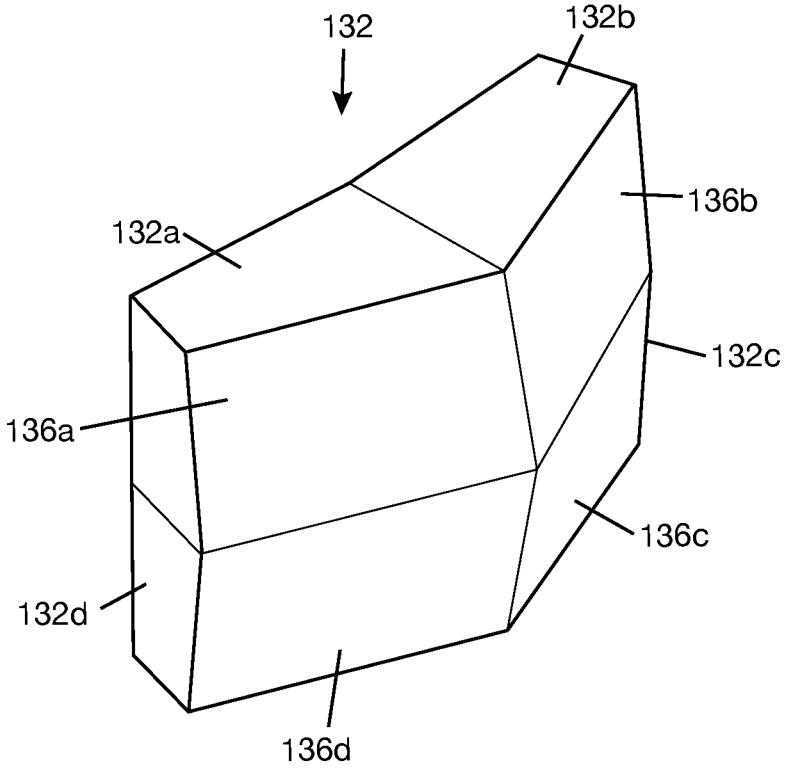
132
132b
136b
132a
132c
136a
136c
132d
136d

FIG. 3A