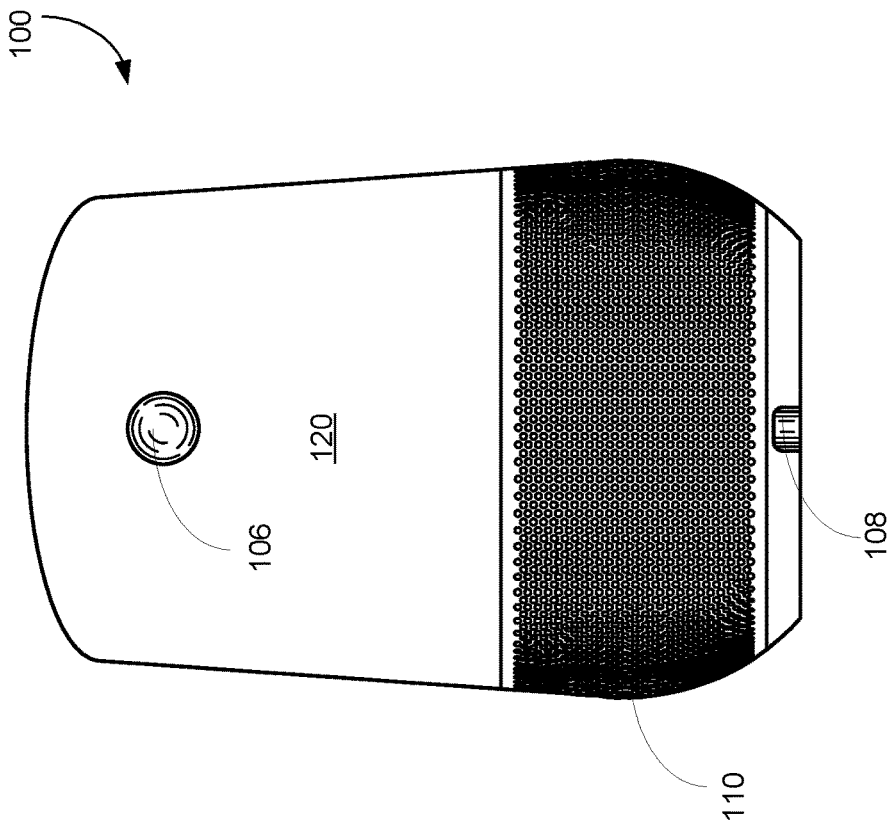

FIGURE 1B

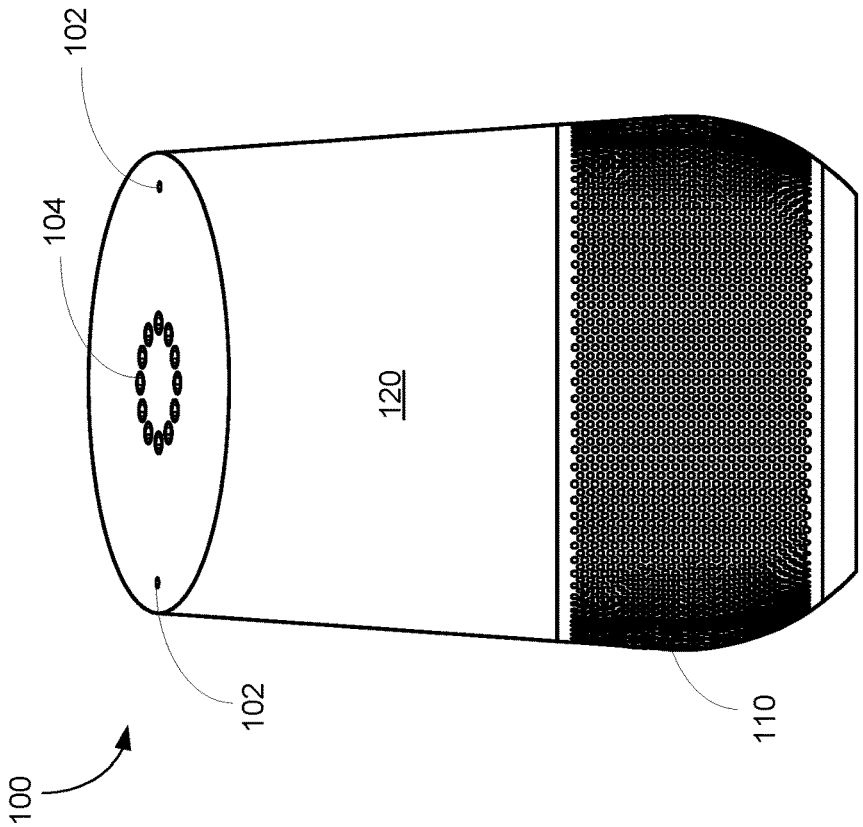

FIGURE 1A