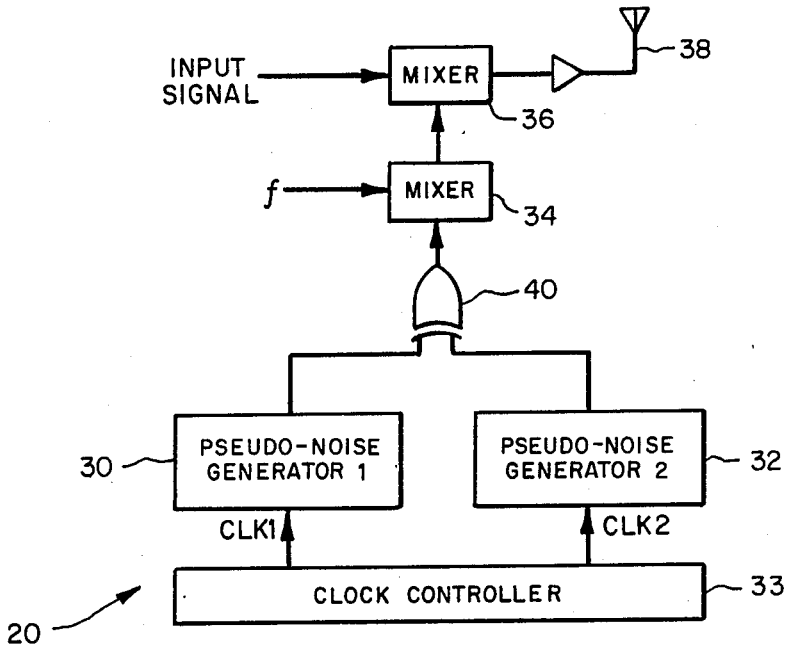
INPUT SIGNAL
MIXER
36
38
f
MIXER
34
40
30
PSEUDO-NOISE GENERATOR 1
PSEUDO-NOISE GENERATOR 2
32
CLK1
CLK2
CLOCK CONTROLLER
33
20

FIG. 1

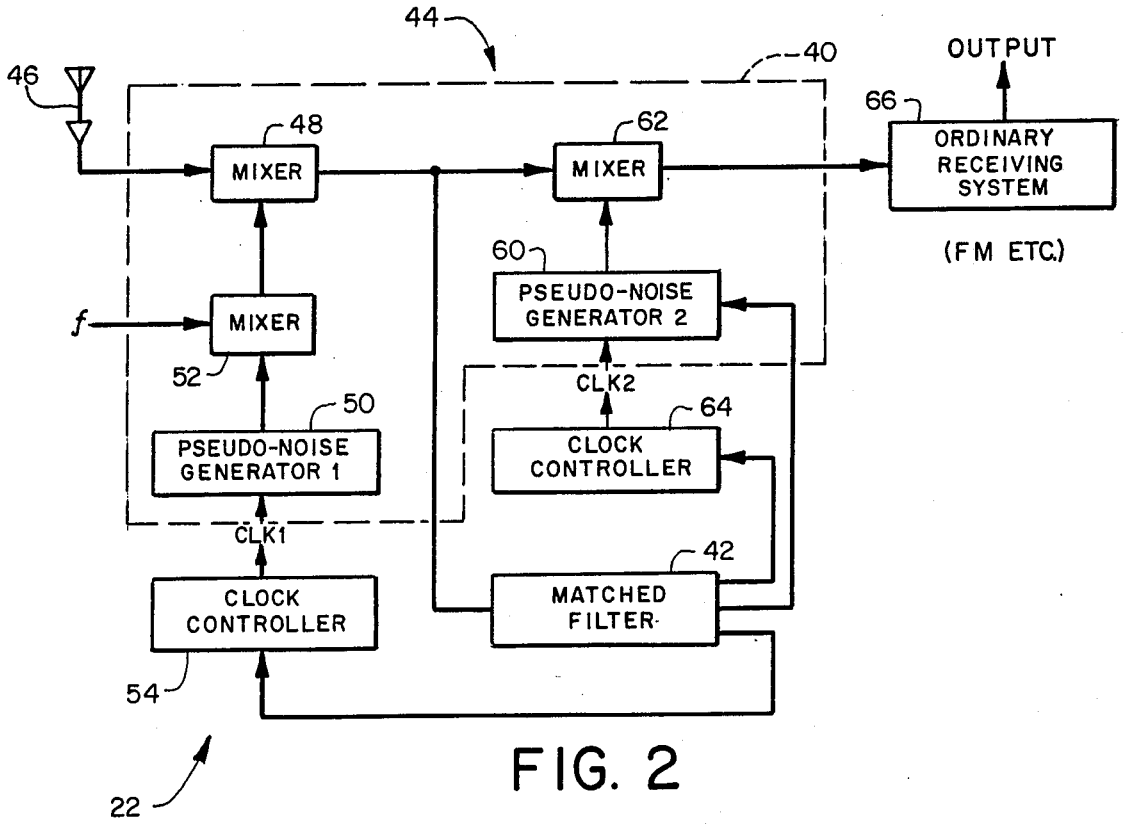
44
40
46
OUTPUT
66
48
62
MIXER
MIXER
ORDINARY RECEIVING SYSTEM
(FM ETC.)
60
PSEUDO-NOISE GENERATOR 2
f
MIXER
52
CLK2
50
64
PSEUDO-NOISE GENERATOR 1
CLOCK CONTROLLER
CLK1
42
CLOCK CONTROLLER
MATCHED FILTER
54
22

FIG. 2