No. 652,934. Patented July 3, 1900.

W. J. McKNIGHT.

ELECTRIC DEVICE FOR INDICATING THE AWAKENING OF PERSONS BURIED ALIVE.

(Application filed May 20, 1899.)

(No Model.)

Fig. 1.

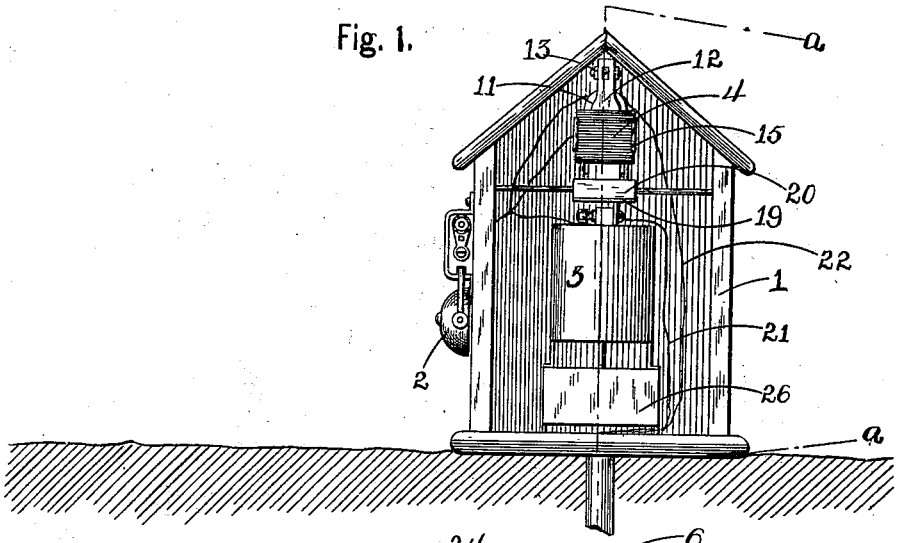

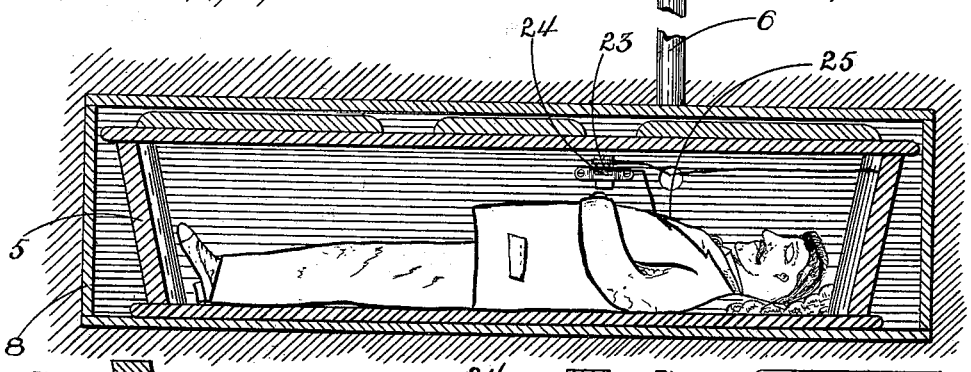

Fig. 2.

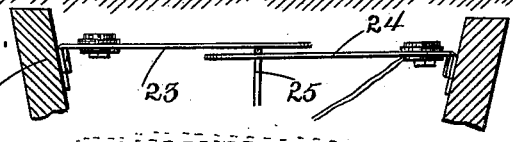

Fig. 3.

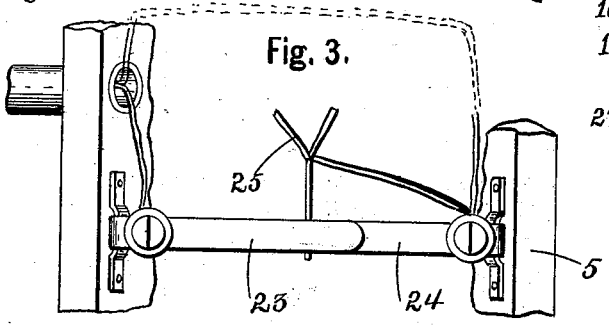

Fig. 4

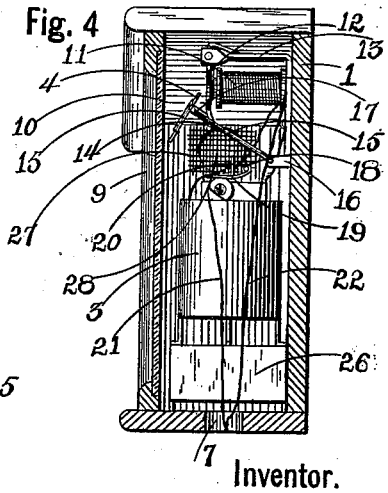

Witnesses.

L. M. Billings.

G. A. Neubauer.

Inventor.

Walter J. McKnight.

By A. J. Sangster Attorney.

THE NORRIS PETERS CO., PHOTO-LITHO., WASHINGTON, D. C.