US010343634B1

(12) **United States Patent**
Fermer et al.

(10) **Patent No.: US 10,343,634 B1**
(45) **Date of Patent: Jul. 9, 2019**

(54) **EXTENDABLE BUMPERS FOR VEHICLES**

(71) Applicants: **Erik Mikael Fermer**, Sunnyvale, CA (US); **Alice C. Watts**, Cupertino, CA (US); **Joel Frederic Jensen**, Sunnyvale, CA (US); **Ronald Jack Smith**, Sunnyvale, CA (US); **Mark B. Rober**, Cupertino, CA (US); **Sung Hoon Kim**, Sunnyvale, CA (US); **David Jennings Dostal**, Sunnyvale, CA (US); **Russell Cranstoun Mead, Jr.**, Sunnyvale, CA (US); **Todd Elliot Lewis**, Sunnyvale, CA (US); **Jesse T. Buehler**, Los Altos, CA (US); **Nathaniel J. Dennis**, Cupertino, CA (US); **Tommaso P. Rivellini**, Sunnyvale, CA (US); **Robert R. Mayer**, Pleasanton, CA (US); **Anthony S. Montevirgen**, San Francisco, CA (US); **Donald J. Parr**, Mountain View, CA (US); **Bryce A. Woollard**, Carpentersville, IL (US); **Adam J. Golman**, Cupertino, CA (US); **Kevin P. Makowski**, Simi Valley, CA (US); **Daniel E. Rivera**, San Jose, CA (US)

(72) Inventors: **Erik Mikael Fermer**, Sunnyvale, CA (US); **Alice C. Watts**, Cupertino, CA (US); **Joel Frederic Jensen**, Sunnyvale, CA (US); **Ronald Jack Smith**, Sunnyvale, CA (US); **Mark B. Rober**, Cupertino, CA (US); **Sung Hoon Kim**, Sunnyvale, CA (US); **David Jennings Dostal**, Sunnyvale, CA (US); **Russell Cranstoun Mead, Jr.**, Sunnyvale, CA (US); **Todd Elliot Lewis**, Sunnyvale, CA (US); **Jesse T. Buehler**, Los Altos, CA (US); **Nathaniel J. Dennis**, Cupertino, CA (US); **Tommaso P. Rivellini**, Sunnyvale, CA (US); **Robert R. Mayer**, Pleasanton, CA (US); **Anthony S. Montevirgen**, San Francisco, CA (US); **Donald J. Parr**, Mountain View, CA (US); **Bryce A. Woollard**, Carpentersville, IL (US); **Adam J. Golman**, Cupertino, CA (US); **Kevin P. Makowski**, Simi Valley, CA (US); **Daniel E. Rivera**, San Jose, CA (US)

(73) Assignee: **Apple Inc.**, Cupertino, CA (US)

(*) Notice: Subject to any disclaimer, the term of this patent is extended or adjusted under 35 U.S.C. 154(b) by 53 days.

(21) Appl. No.: **15/418,208**

(22) Filed: **Jan. 27, 2017**

Related U.S. Application Data

(60) Provisional application No. 62/287,499, filed on Jan. 27, 2016.

(51) **Int. Cl.**
B60R 19/38 (2006.01)
B60R 19/34 (2006.01)

(52) **U.S. Cl.**
CPC ***B60R 19/38*** (2013.01); ***B60R 19/34*** (2013.01)

(58) **Field of Classification Search**
CPC B60R 19/38; B60R 19/34
(Continued)

(56) **References Cited**

U.S. PATENT DOCUMENTS

1,504,679 A 8/1924 Dietz
1,754,104 A 4/1930 Hoffman
(Continued)

FOREIGN PATENT DOCUMENTS

DE 4113031 A1 10/1992
DE 1414432 A1 11/1995
(Continued)

Primary Examiner — Jason S Morrow
Assistant Examiner — E Turner Hicks
(74) *Attorney, Agent, or Firm* — Young Basile Hanlon & MacFarlane, P.C.

(57) **ABSTRACT**
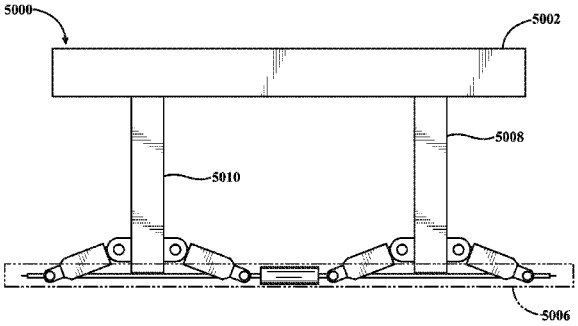
An apparatus includes a vehicle structure, a bumper, an elongate structural member, and an extension portion. The
(Continued)