April 27, 1948. C. F. HENNEY 2,440,634

SHELL FEEDING MECHANISM FOR ROCKET GUNS

Filed Oct. 14, 1943

Fig. 1.

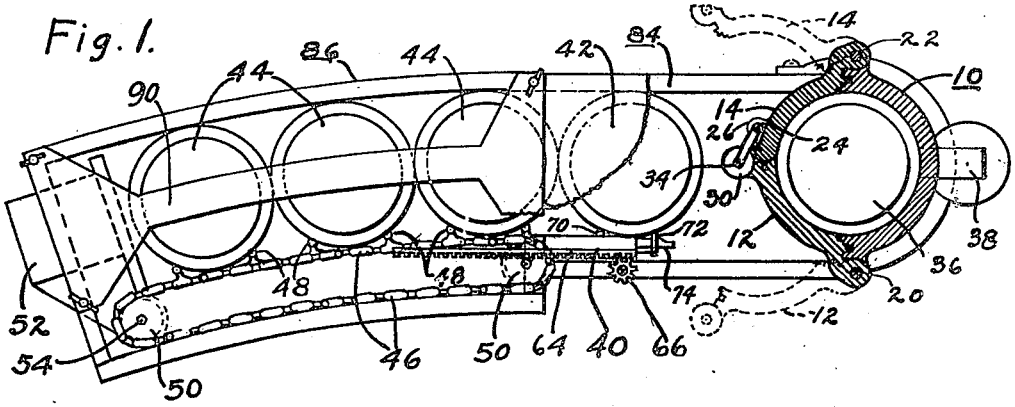

Fig. 2.

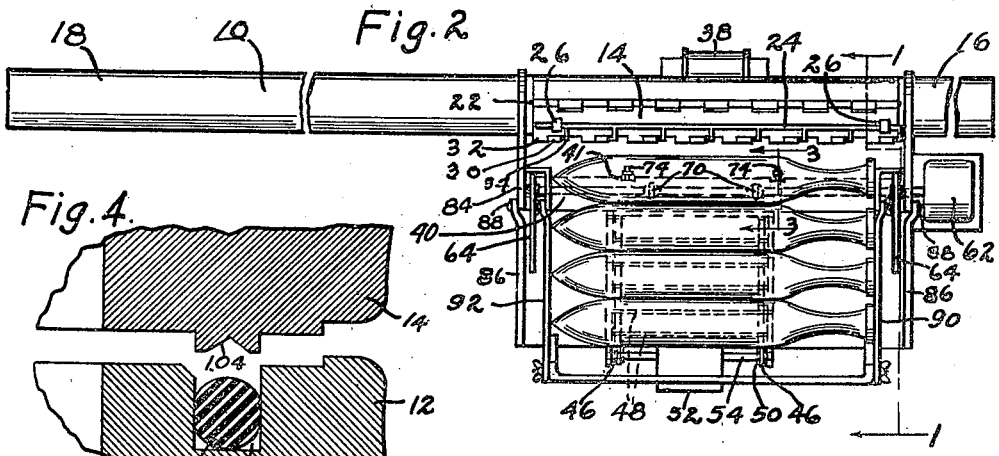

Fig. 4.

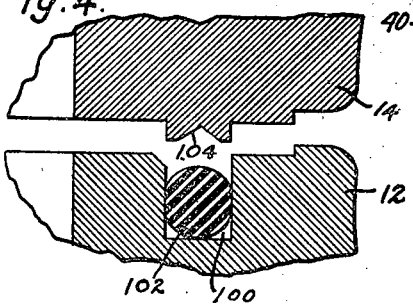

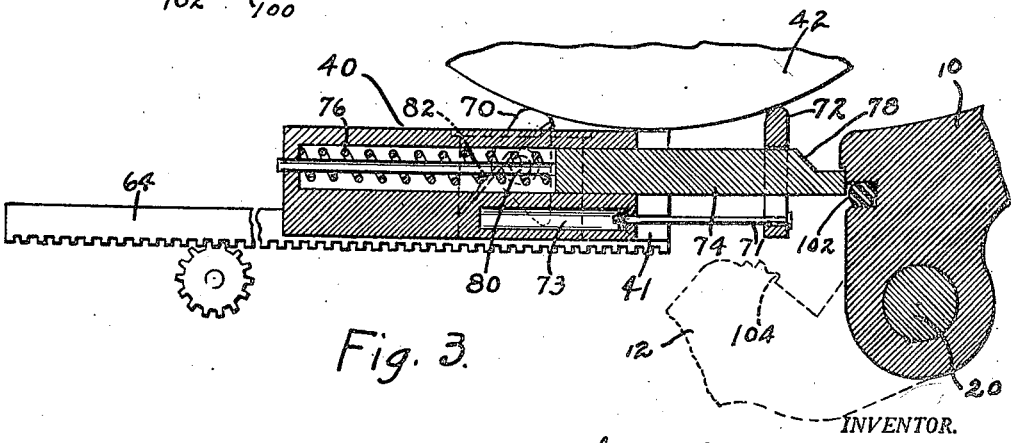

Fig. 3.

INVENTOR.

Charles F. Henney,

BY

Spencer, Hardman & Fehr,

His Attorneys.