US007128634B2

(12) **United States Patent**
Ogihara

(10) **Patent No.: US 7,128,634 B2**
(45) **Date of Patent: Oct. 31, 2006**

(54) **CONVERTIBLE DRIVE TRAIN FOR RADIO-CONTROLLED TOY**

(75) Inventor: **Nobuaki Ogihara**, Saitama (JP)

(73) Assignee: **RadioShack Corporation**, Fort Worth, TX (US)

(*) Notice: Subject to any disclaimer, the term of this patent is extended or adjusted under 35 U.S.C. 154(b) by 0 days.

(21) Appl. No.: **10/680,944**

(22) Filed: **Oct. 8, 2003**

(65) **Prior Publication Data**

US 2005/0079792 A1 Apr. 14, 2005

(51) **Int. Cl.**
A63H 17/26 (2006.01)

(52) **U.S. Cl.** **446/456**; 446/469; 446/471

(58) **Field of Classification Search** 446/431, 446/439, 443, 448, 454, 456, 457, 461, 469, 446/470, 471
See application file for complete search history.

(56) **References Cited**

U.S. PATENT DOCUMENTS

4,540,830 A 9/1985 Bowers
4,710,147 A * 12/1987 Wakase 446/464
4,878,877 A * 11/1989 Auer et al. 446/463
5,090,934 A 2/1992 Quercetti
5,484,321 A * 1/1996 Ishimoto 446/433
5,919,077 A * 7/1999 Gondcaille 446/469
5,947,795 A * 9/1999 Cohen 446/469
6,089,952 A 7/2000 Dowd et al.
6,371,830 B1 4/2002 Wu et al.
6,450,857 B1 9/2002 Watanabe
6,475,059 B1 * 11/2002 Lee 446/454
2004/0198170 A1 * 10/2004 Tilbor et al. 446/456

* cited by examiner

Primary Examiner—Jacob K. Ackun, Jr.
(74) *Attorney, Agent, or Firm*—Haynes and Boone, LLP

(57) **ABSTRACT**

A radio-controlled car convertible from a two-wheel drive configuration to a four-wheel drive configuration is described. The radio-controlled car includes a chassis, a first drive assembly positioned in a first portion of the chassis, and a modular second drive assembly adapted to be inserted into a second portion of the chassis to modify the radio-controlled car to a four-wheel drive configuration.
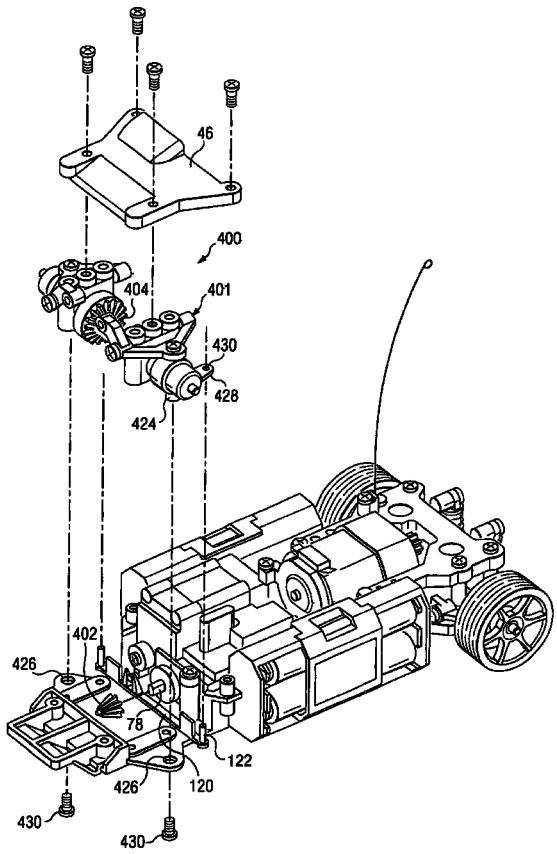
51 Claims, 14 Drawing Sheets