Sept. 12, 1950 R. C. DEHMEL 2,522,434

CONTROL RESPONSE TRAINER FOR AIRCRAFT PILOTS

Filed Oct. 14, 1944 2 Sheets-Sheet 1

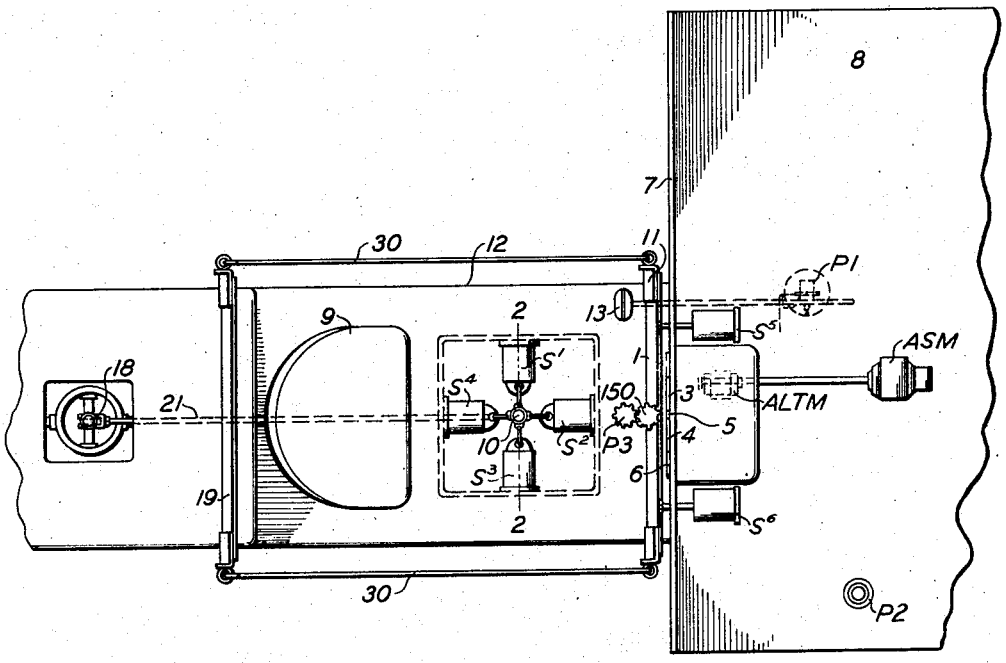

FIG. 1

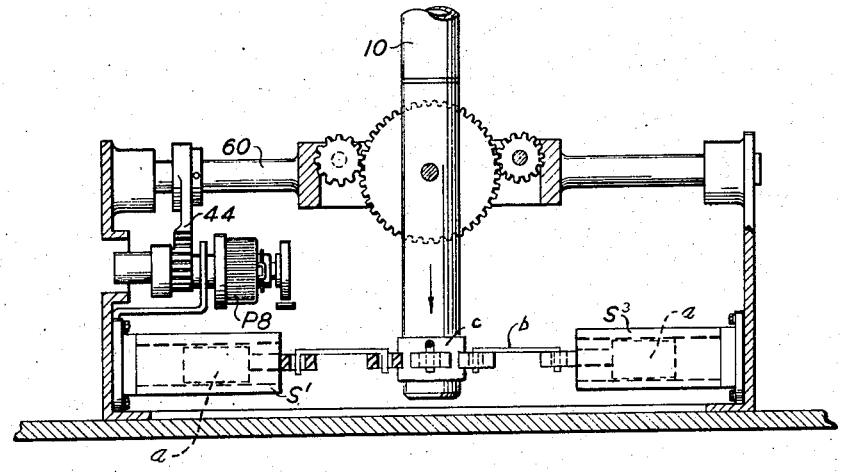

FIG. 2

INVENTOR.
RICHARD CARL DEHMEL
BY Ward Crosby & Neal
his attorneys