J. D. PEDERSEN.

AUTOLOADING FIREARM.

APPLICATION FILED JULY 30, 1915. RENEWED JULY 17, 1919.

1,348,733. Patented Aug. 3, 1920.

19 SHEETS—SHEET 1.

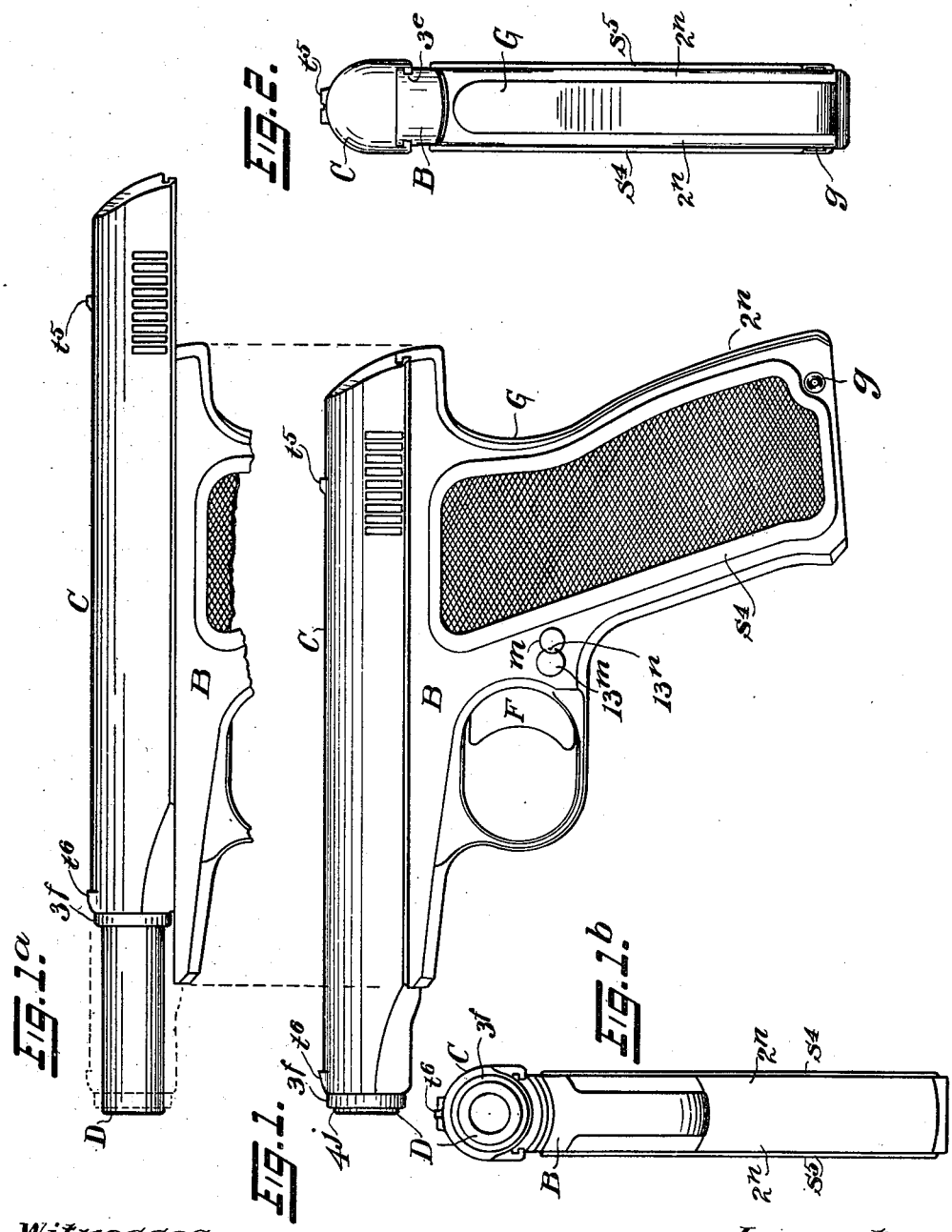

Witnesses:
Chas. E. Whiteman.
H. D. Penney.

Inventor:
John D. Pedersen,
By his Atty. F. H. Richards.