US009511833B2

(12) **United States Patent**
Scott et al.

(10) **Patent No.: US 9,511,833 B2**
(45) **Date of Patent: Dec. 6, 2016**

(54) **MULTI-COMPONENT ROBOT FOR BELOW ICE SEARCH AND RESCUE**

(71) Applicant: **Natick Public Schools**, Natick, MA (US)

(72) Inventors: **Doug Scott**, Stow, MA (US); **Adam Azanow**, Natick, MA (US); **Daniel Carson**, Framingham, MA (US); **William Coburn**, Natick, MA (US); **Nicholas Exarchos**, Natick, MA (US); **Russell Forrest**, Norfolk, MA (US); **Jason Geller**, Natick, MA (US); **Ford Grundberg**, Natick, MA (US); **Kimya Harper**, Natick, MA (US); **Susan Haverstick**, Natick, MA (US); **Larion Johnson**, Hyde Park, MA (US); **Kevin King**, Uxbridge, MA (US); **James Kinsey**, North Falmouth, MA (US); **Alex Krasa**, Natick, MA (US); **Ilir Kumi**, Natick, MA (US); **Douglas Laderman**, Natick, MA (US); **Jonathan Magee**, Natick, MA (US); **James McLean**, Natick, MA (US); **Alex Petrovsky**, Natick, MA (US); **Katelyn Sweeney**, Natick, MA (US); **Nickolas Thorsen**, Natick, MA (US); **Olivia Van Amsterdam**, Natick, MA (US); **Jacob Wainer**, Natick, MA (US); **Chris Williamson**, Natick, MA (US); **Ethan Ziegler**, Natick, MA (US)

(*) Notice: Subject to any disclaimer, the term of this patent is extended or adjusted under 35 U.S.C. 154(b) by 0 days.

(21) Appl. No.: **14/260,144**

(22) Filed: **Apr. 23, 2014**

(65) **Prior Publication Data**

US 2014/0360420 A1 Dec. 11, 2014

Related U.S. Application Data

(60) Provisional application No. 61/814,986, filed on Apr. 23, 2013.

(51) **Int. Cl.**

B63C 11/34	(2006.01)
B63C 11/48	(2006.01)
B63G 8/08	(2006.01)
B63G 8/00	(2006.01)

(52) **U.S. Cl.**

CPC ***B63G 8/08*** (2013.01); *B63C 11/34* (2013.01); *B63C 11/48* (2013.01); *B63G 2008/007* (2013.01); *Y10S 901/08* (2013.01); *Y10S 901/47* (2013.01)

(58) **Field of Classification Search**

CPC B63C 1/34; B63C 1/42; B63C 1/48; B63C 13/0011; B63G 2008/005; B63G 2008/007

See application file for complete search history.

(56) **References Cited**

U.S. PATENT DOCUMENTS

4,010,619	A *	3/1977	Hightower et al.	405/191
4,721,055	A *	1/1988	Pado	405/191
6,260,504	B1 *	7/2001	Moles et al.	114/312
7,597,811	B2 *	10/2009	Usher	210/747.4

(Continued)

Primary Examiner — Frederick L Lagman

(74) *Attorney, Agent, or Firm* — Wolf, Greenfield & Sacks, P.C.

(57) **ABSTRACT**

The invention relates to remotely operated multi-component search robots for underwater search and rescue operations, and particularly suited for searches under ice.
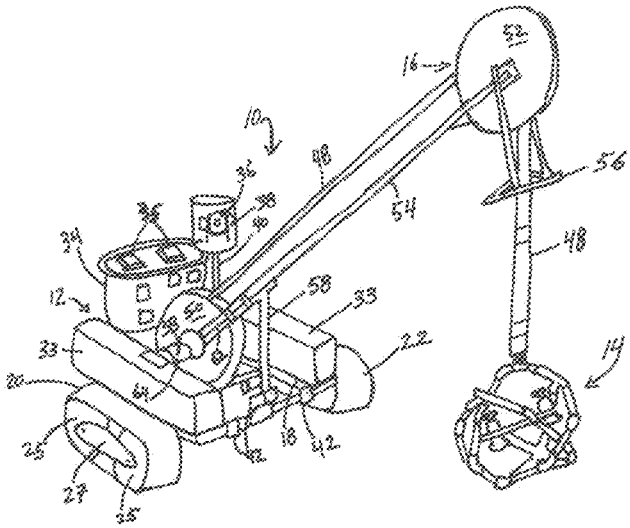
9 Claims, 9 Drawing Sheets