Jan. 4, 1949. F. S. POORMAN 2,457,832

AIRCRAFT GUNNERY PRACTICE RANGE

Filed June 2, 1945 7 Sheets-Sheet 1

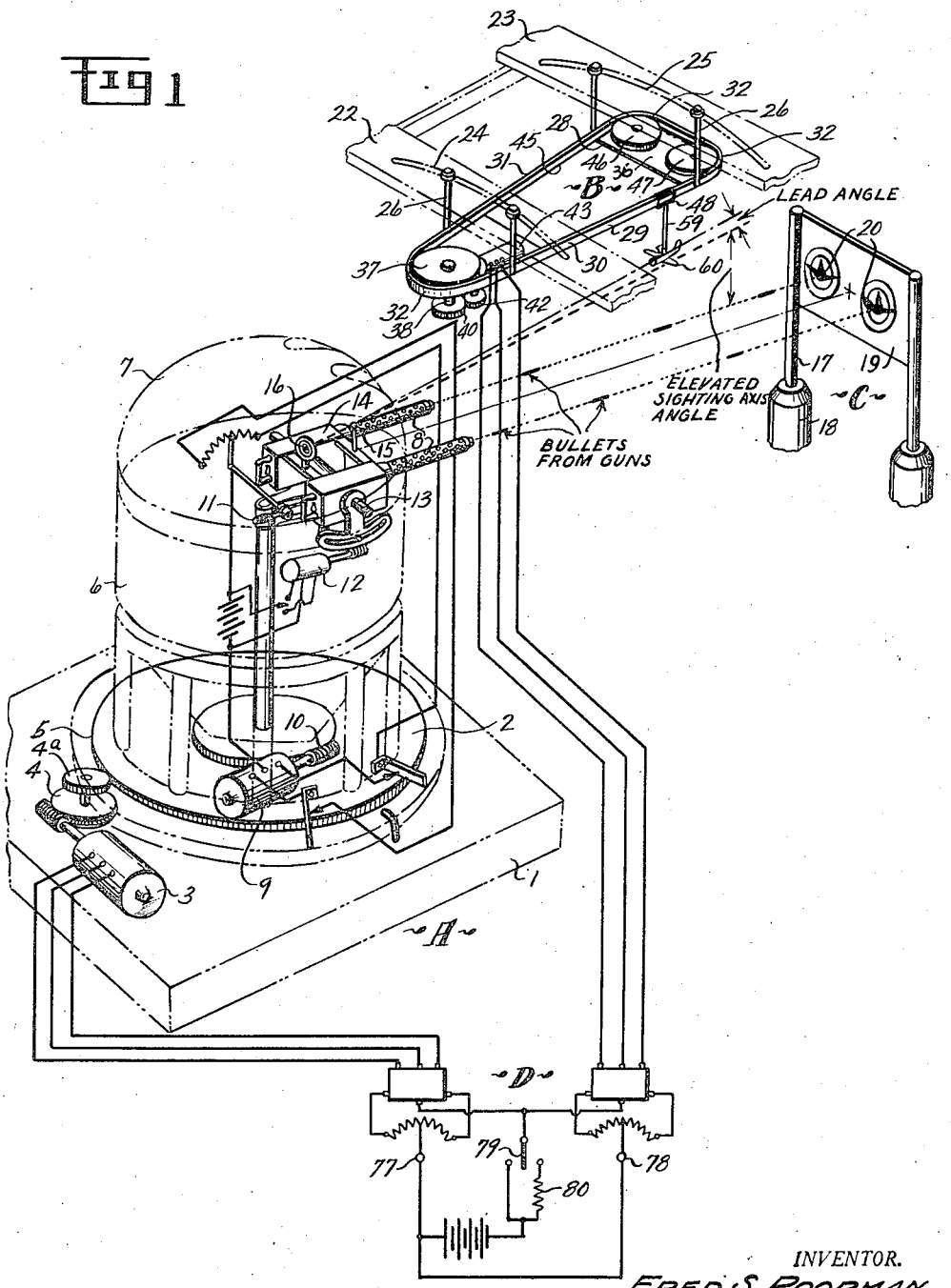

INVENTOR.
FRED S. POORMAN
BY Clade Koontz and Charles S. Wagner
ATTORNEYS