March 30, 1948. T. H. BARTH 2,438,532

SYNCHRONIZING BOMB SIGHT

Filed Sept. 28, 1932 9 Sheets-Sheet 1

Fig. 1.

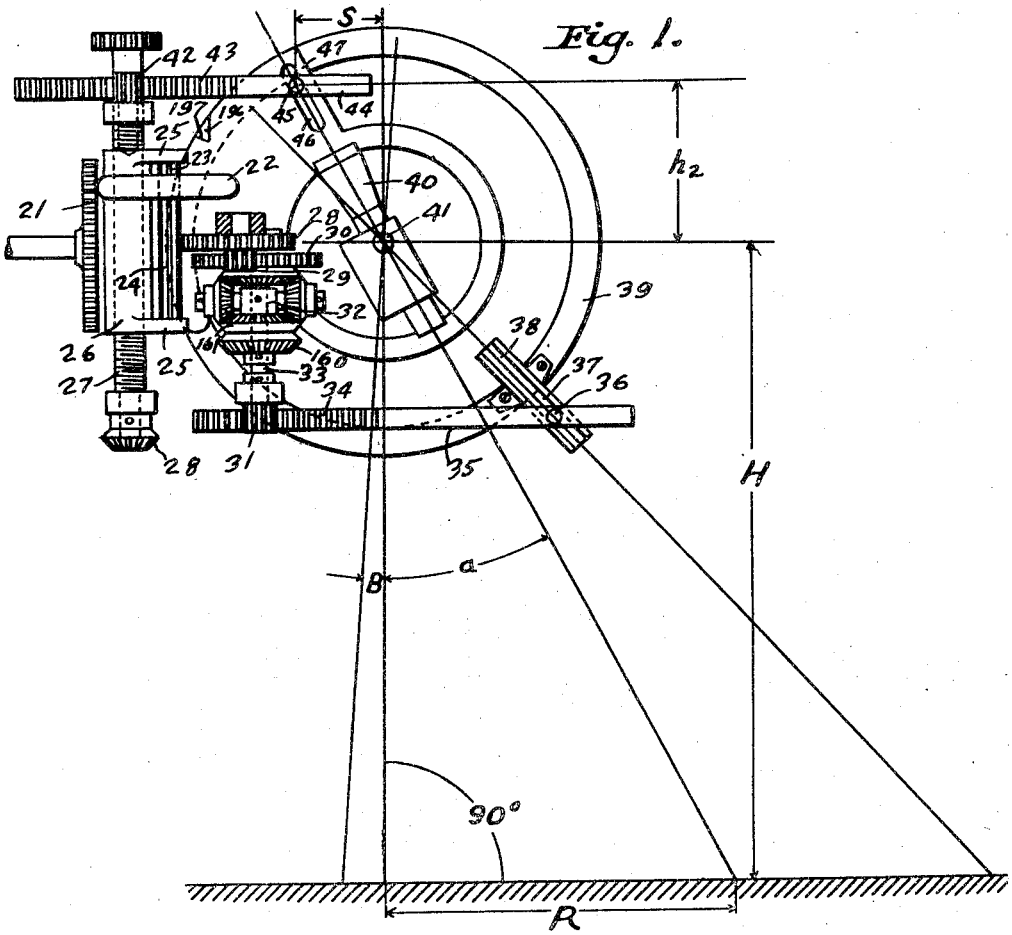

Fig. 2.

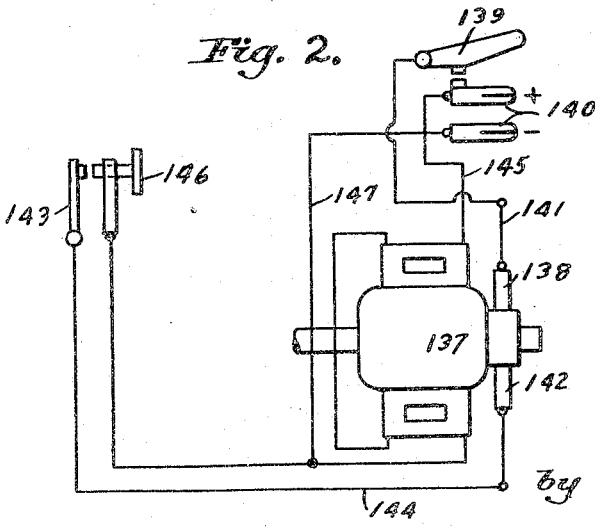

Inventor:
T. H. Barth
by
Attorney