Oct. 7, 1947. W. S. PARK 2,428,432

AERIAL TRAINER

Filed Feb. 8, 1943 9 Sheets-Sheet 1

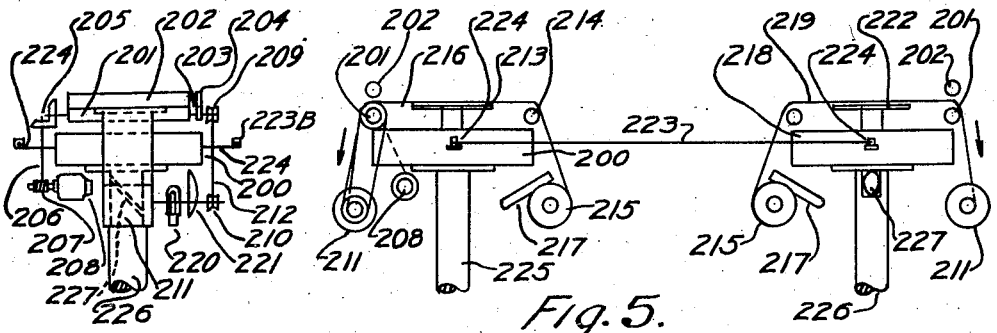

Fig. 5.

Fig. 4.

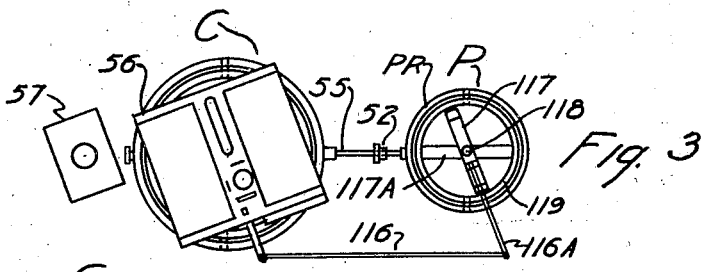

Fig. 3

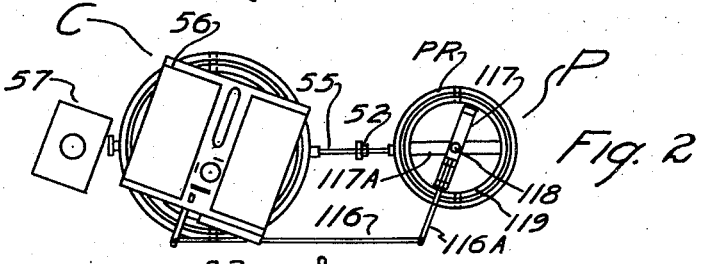

Fig. 2

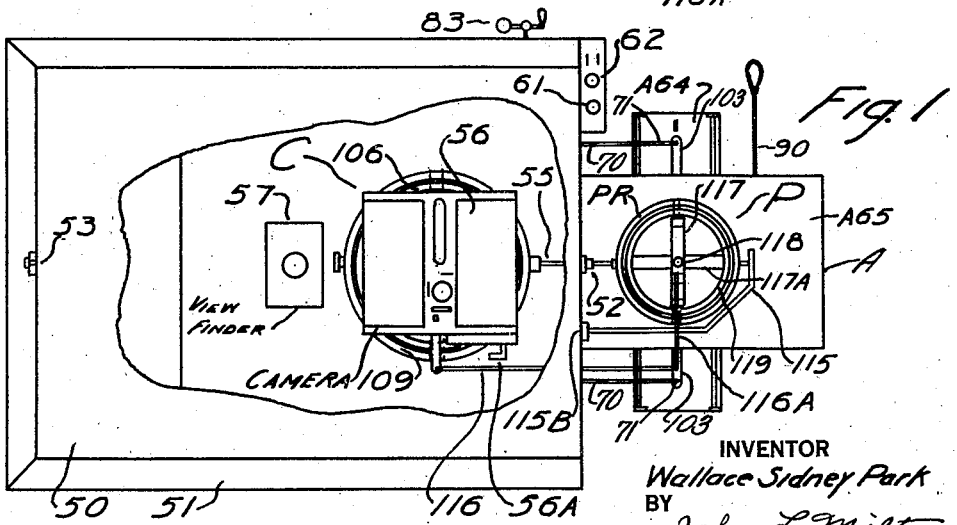

Fig. 1

INVENTOR
Wallace Sidney Park
BY
John L. Milton
ATTORNEY