March 25, 1958 J. H. MYER 2,828,232

METHOD FOR PRODUCING JUNCTIONS IN SEMI-CONDUCTOR DEVICE

Filed May 1, 1956 2 Sheets-Sheet 1

Fig. 1.

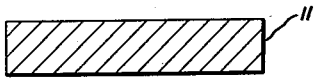

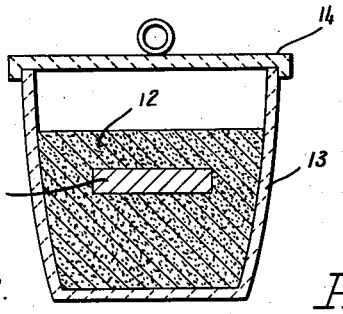

Fig. 2.

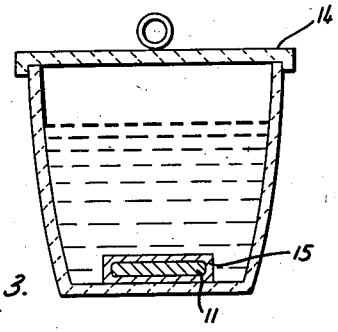

Fig. 3.

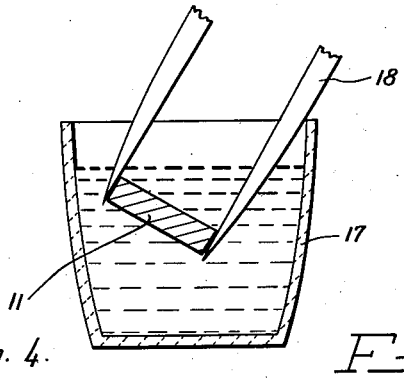

Fig. 4.

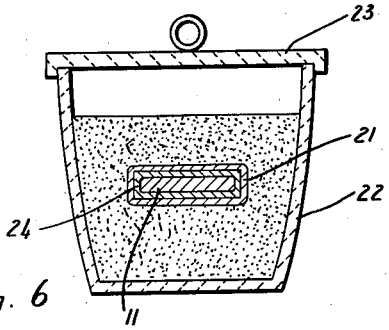

Fig. 6

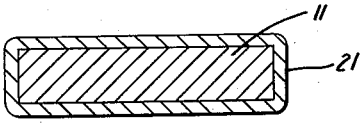

Fig. 5.

JON H. MYER,
INVENTOR

BY

ATTORNEY