J. M. ALDEN.

WOOD SCREW MACHINE.

No 110,532. Patented Dec. 27, 1870.

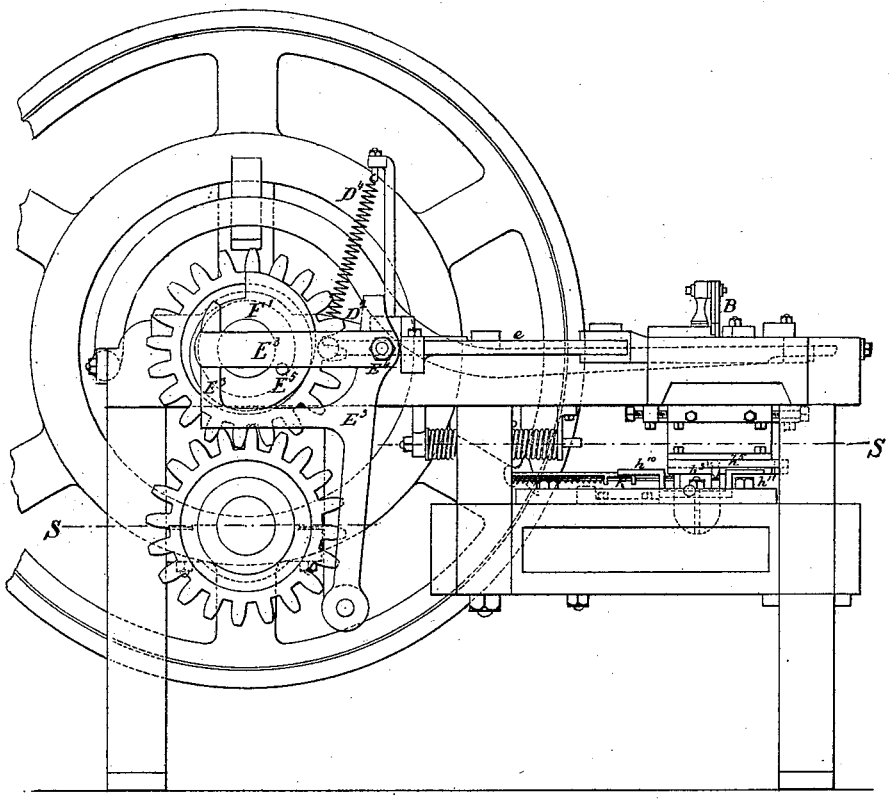

Fig. 2,

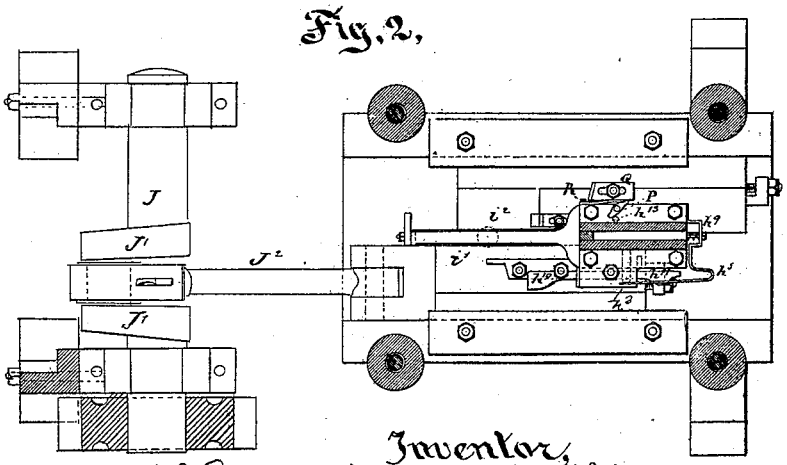

Witnesses, A. Hoernlein
C. C. Livings

Inventor,
James M. Alden
by his Atty T. S. Sutton

THE NORRIS PETERS CO., PHOTO-LITHO., WASHINGTON, D. C.