Oct. 4, 1966 N. E. HALE ET AL 3,276,531

VEHICLES FOR INVALIDS FOR TRAVEL OVER HORIZONTAL AND INCLINED SURFACES

Filed March 12, 1965 5 Sheets-Sheet 1

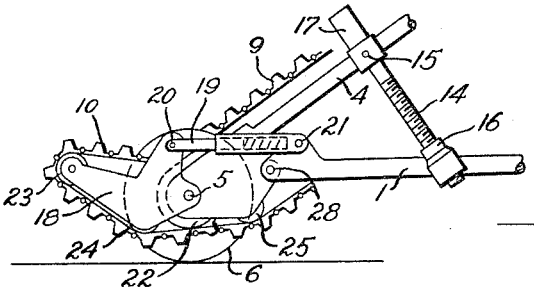

FIG 24

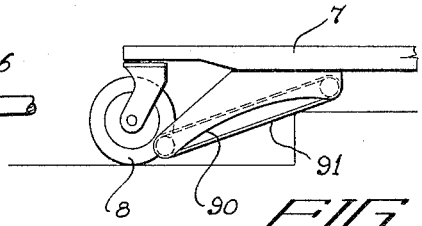

FIG 21

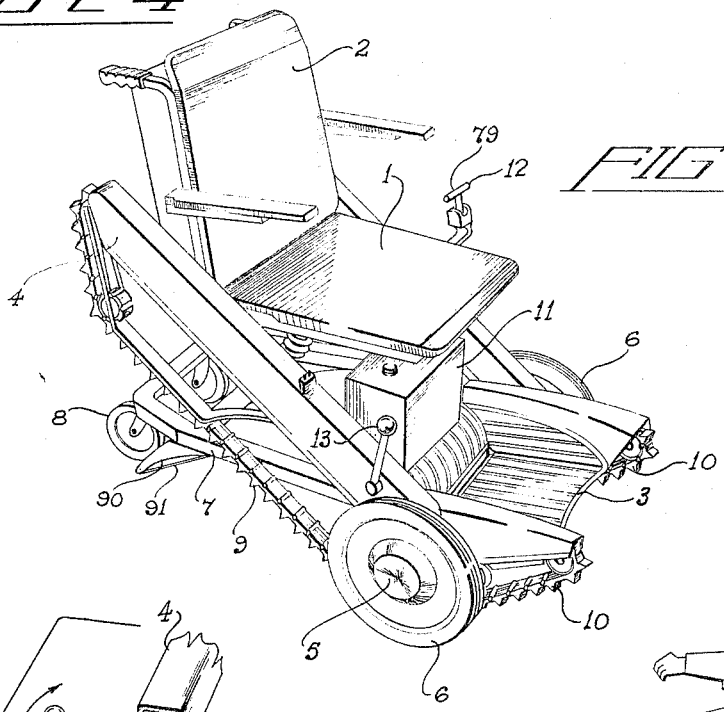

FIG 1

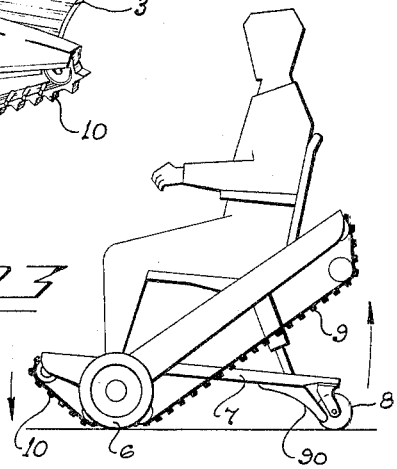

FIG 23

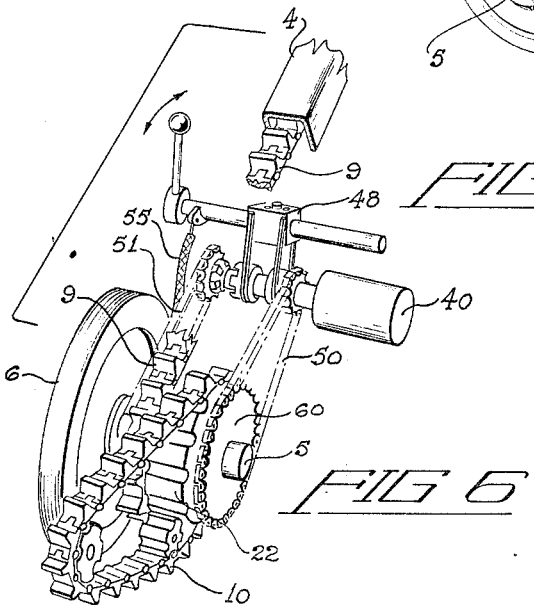

FIG 6

INVENTORS
NEVILLE E. HALE AND
KENNETH GARDNER

BY

THEIR ATTORNEY