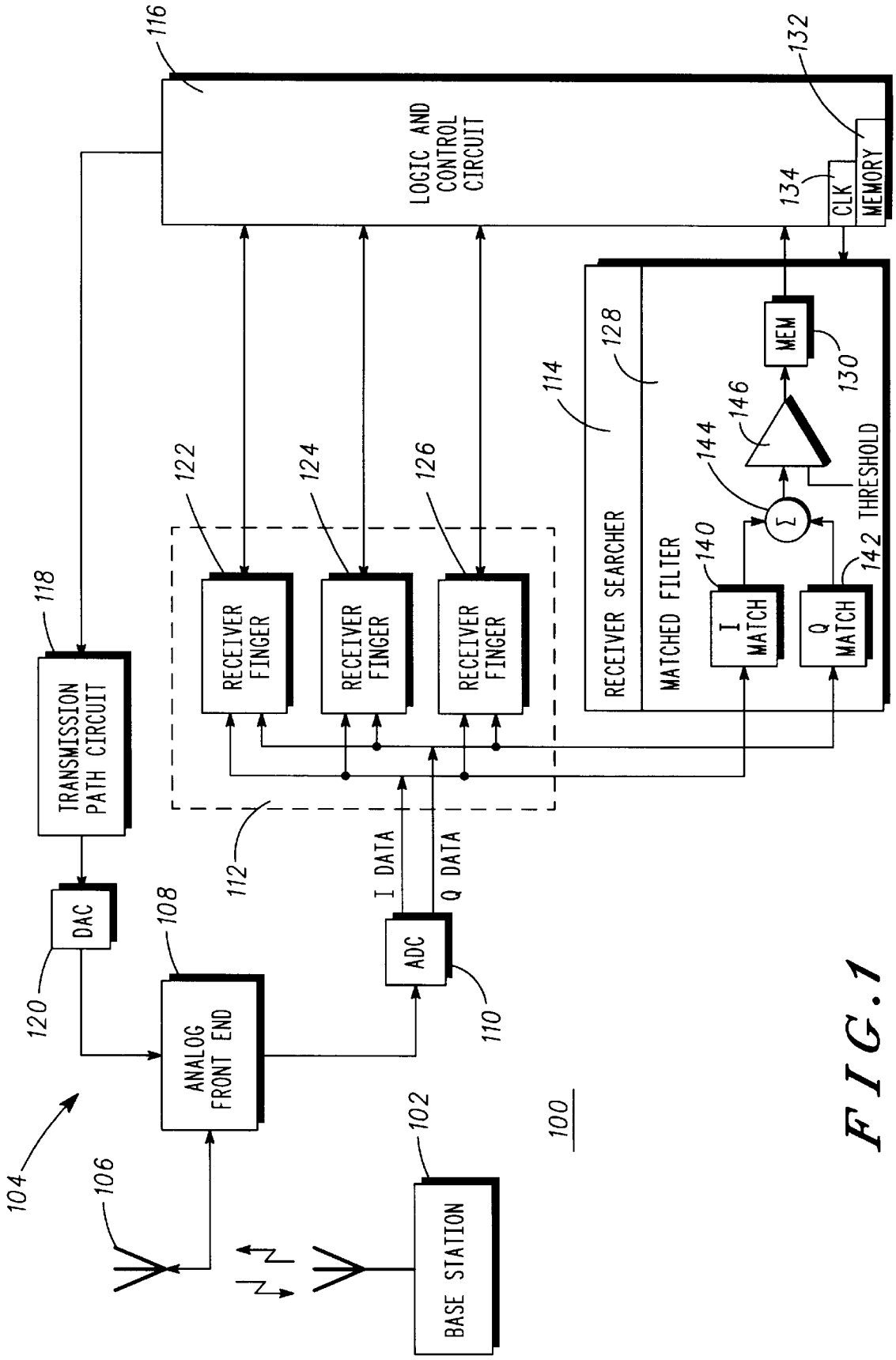
LOGIC AND CONTROL CIRCUIT
116
132
134
CLK
MEMORY
TRANSMISSION PATH CIRCUIT
118
DAC
120
ANALOG FRONT END
108
104
106
BASE STATION
102
100
ADC
110
I DATA
Q DATA
112
RECEIVER FINGER
122
RECEIVER FINGER
124
RECEIVER FINGER
126
RECEIVER SEARCHER
128
114
MATCHED FILTER
I MATCH
140
Q MATCH
142
Σ
144
146
THRESHOLD
MEM
130

FIG. 1