Feb. 20, 1962

W. G. STOECKICHT

3,021,731

PLANETARY GEAR TRANSMISSION

Filed June 13, 1958

2 Sheets-Sheet 2

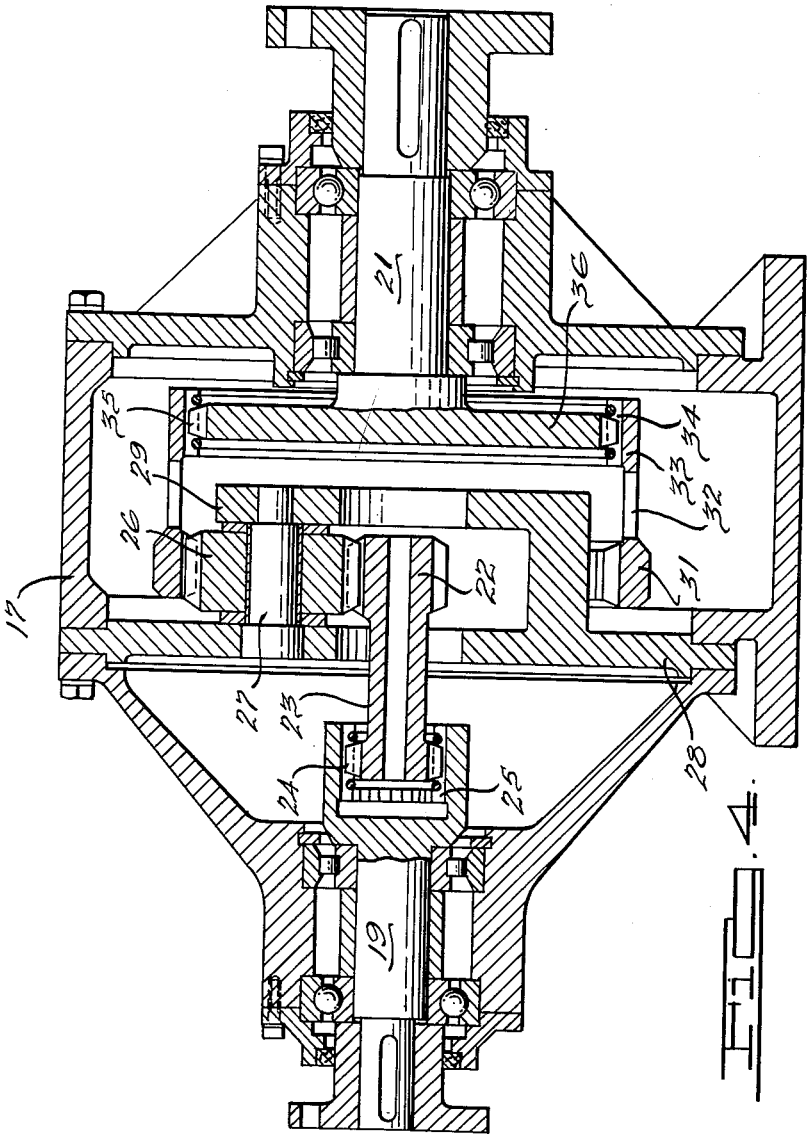

FIG. 4.

INVENTOR.
Wilhelm G. Stoeckicht.
BY
Harness, Dickey & Pierce.
ATTORNEYS.