Feb. 20, 1962 W. G. STOECKICHT 3,021,731

PLANETARY GEAR TRANSMISSION

Filed June 13, 1958

2 Sheets-Sheet 1

FIG. 1.

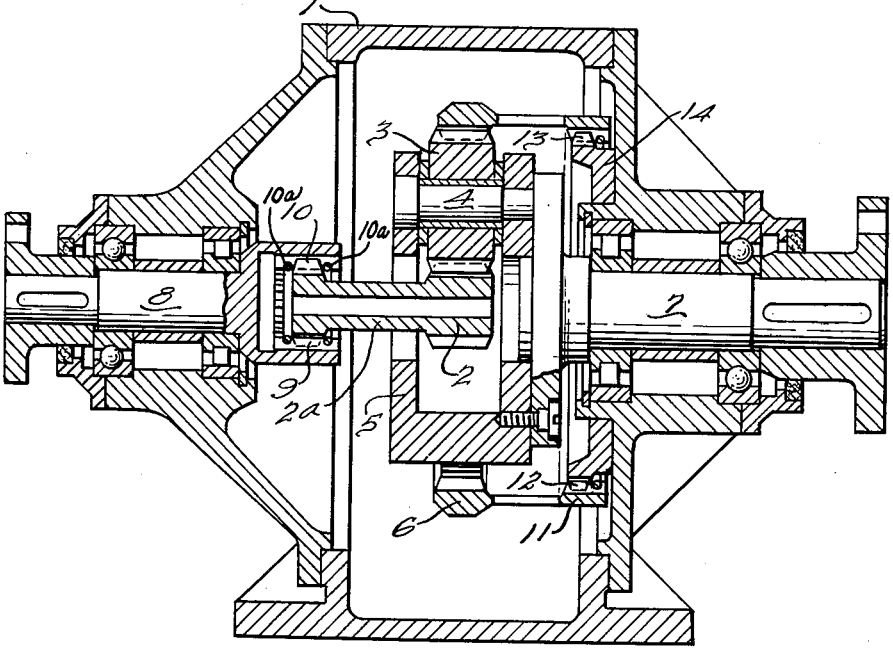

FIG. 2.

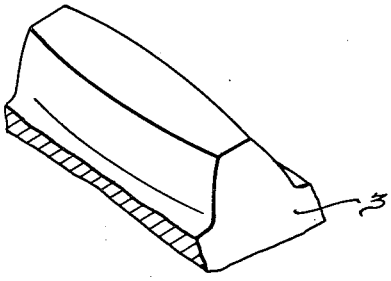

FIG. 3.

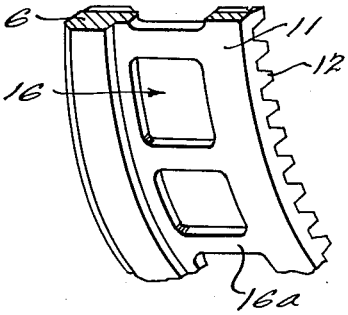

INVENTOR.
Wilhelm G. Stoeckicht.
BY
Harness, Dickey & Pierce
ATTORNEYS.