(No Model.) 2 Sheets—Sheet 1.

J. K. STARLEY.

ROLLER BEARING FOR VELOCIPEDES.

No. 353,330. Patented Nov. 30, 1886.

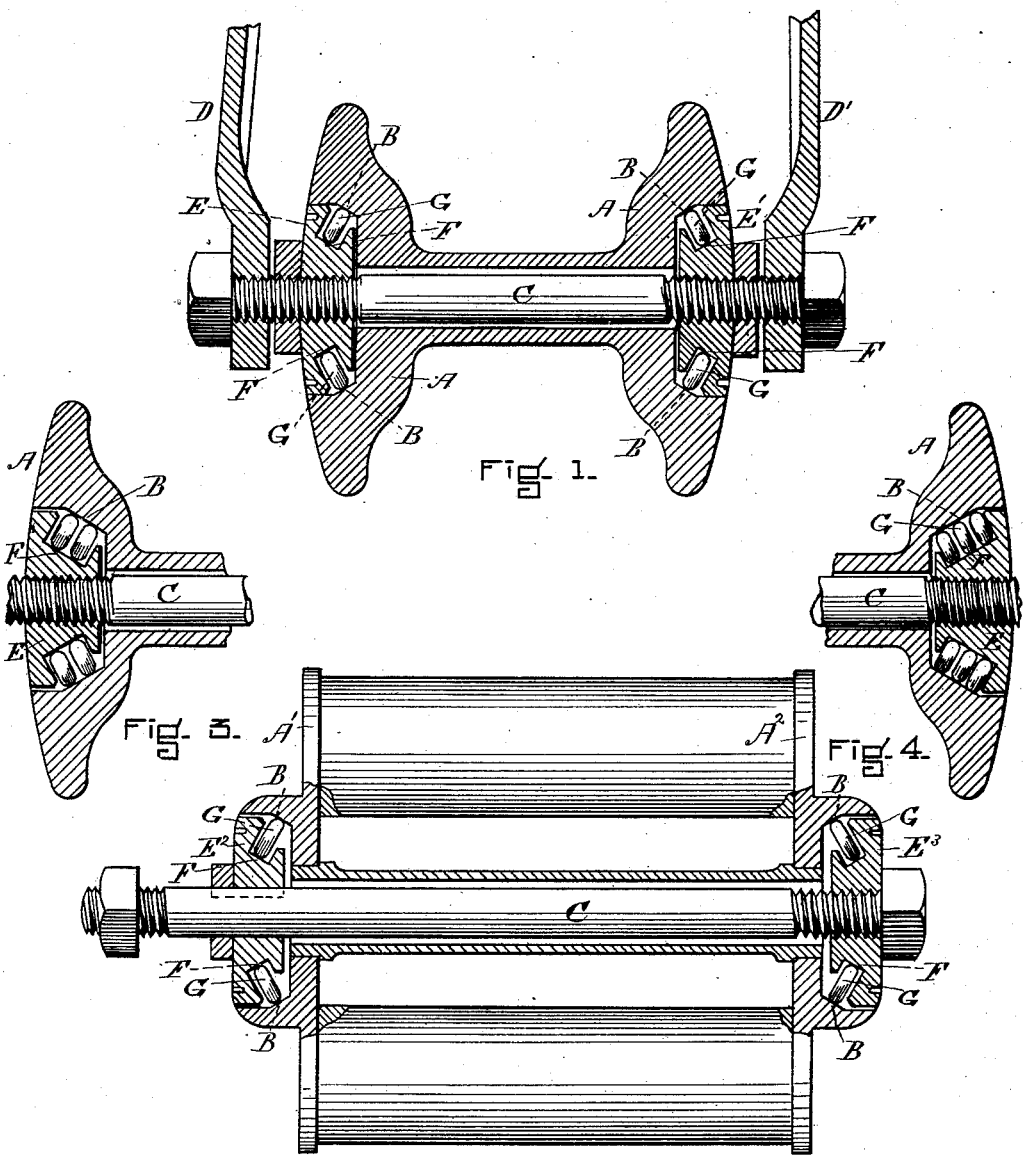

WITNESSES.
E. P. J. Morton
Stedman Buttrick

INVENTOR.
John K. Starley
By Charles E. Pratt
Atty.

N. PETERS, Photo-Lithographer, Washington, D. C.