US010818430B2

(12) **United States Patent**
Dela Cruz

(10) **Patent No.: US 10,818,430 B2**
(45) **Date of Patent: Oct. 27, 2020**

(54) **TRANSMITTER FOR INDUCTIVE POWER TRANSFER SYSTEM**

(71) Applicant: **Apple Inc.**, Cupertino, CA (US)

(72) Inventor: **Lawrence Bernardo Dela Cruz**, Auckland (NZ)

(73) Assignee: **Apple Inc.**, Cupertino, CA (US)

(*) Notice: Subject to any disclaimer, the term of this patent is extended or adjusted under 35 U.S.C. 154(b) by 566 days.

(21) Appl. No.: **15/514,251**

(22) PCT Filed: **Sep. 22, 2015**

(86) PCT No.: **PCT/NZ2015/050160**
§ 371 (c)(1),
(2) Date: **Mar. 24, 2017**

(87) PCT Pub. No.: **WO2016/048170**
PCT Pub. Date: **Mar. 31, 2016**

(65) **Prior Publication Data**

US 2017/0301462 A1 Oct. 19, 2017

Related U.S. Application Data

(60) Provisional application No. 62/055,924, filed on Sep. 26, 2014.

(51) **Int. Cl.**

H01F 27/02	(2006.01)
H01F 27/28	(2006.01)
H01F 38/14	(2006.01)
H02J 50/12	(2016.01)

(52) **U.S. Cl.**
CPC ***H01F 38/14*** (2013.01); ***H01F 27/02*** (2013.01); ***H01F 27/2823*** (2013.01); ***H02J 50/12*** (2016.02)

(58) **Field of Classification Search**
CPC H01F 27/02; H01F 27/2823; H01F 38/14; H02J 50/12
USPC 307/104; 333/219; 320/108, 109; 363/22
See application file for complete search history.

(56) **References Cited**

U.S. PATENT DOCUMENTS

3,800,213	A	3/1974	Rorden
4,825,166	A	4/1989	MacGugan
5,281,941	A	1/1994	Bernstein

(Continued)

FOREIGN PATENT DOCUMENTS

CN	1185867	A	6/1998
CN	101630562	A	1/2010

(Continued)

OTHER PUBLICATIONS

European Search Report for EP Application No. 15844230.1 dated Oct. 4, 2017 (11 pages).

(Continued)

Primary Examiner — Rexford N Barnie
Assistant Examiner — Toan T Vu
(74) *Attorney, Agent, or Firm* — Blank Rome LLP

(57) **ABSTRACT**

An inductive power transfer transmitter that includes an enclosure for accommodating devices to be energised. The enclosure has one or more side walls and one or more coils for generating an alternating magnetic field within the enclosure. The density of the one or more coils varies with distance from an end of the one or more sidewalls.
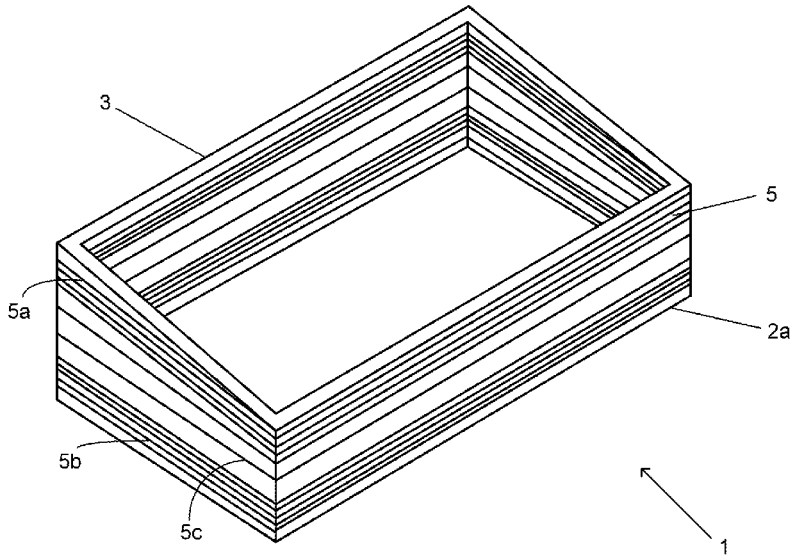
12 Claims, 15 Drawing Sheets