L. Yale,

Door Lock.
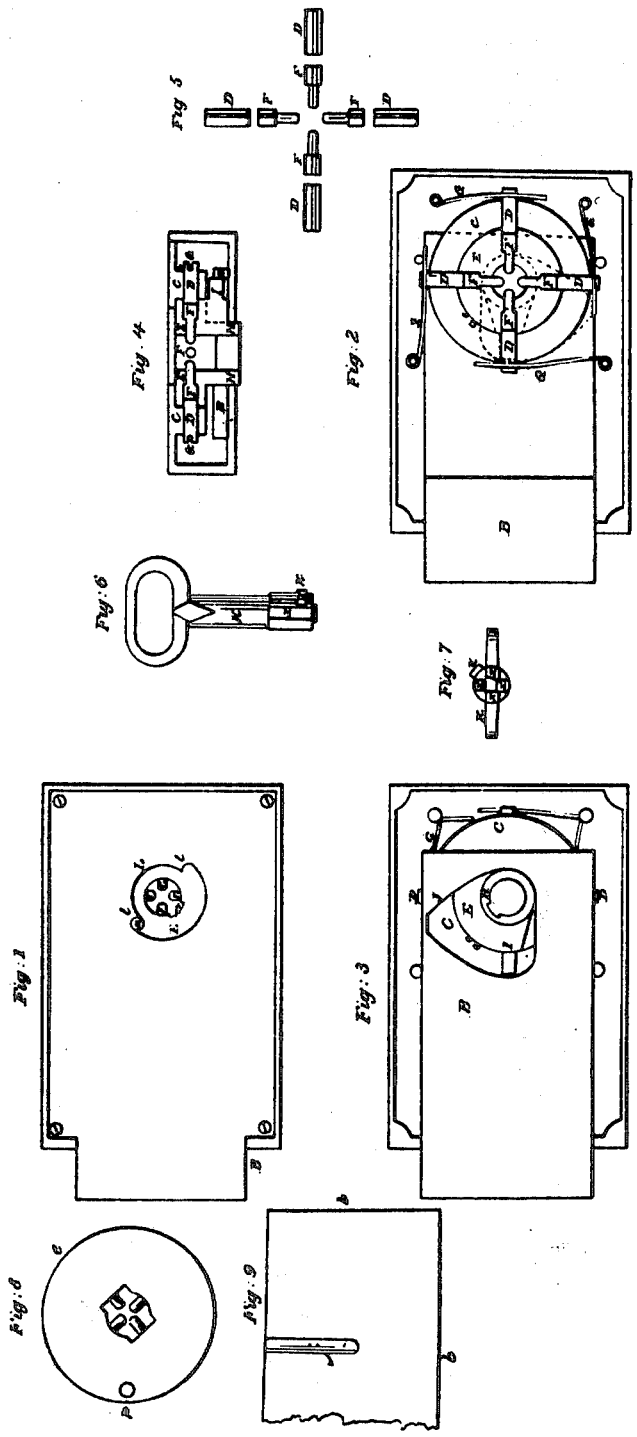
No. 3,630. Patented June 13, 1844.