(No Model.)

J. D. GOULD.

HEAT DETECTOR FOR ELECTRIC FIRE ALARM SYSTEMS.

No. 601,730. Patented Apr. 5, 1898.

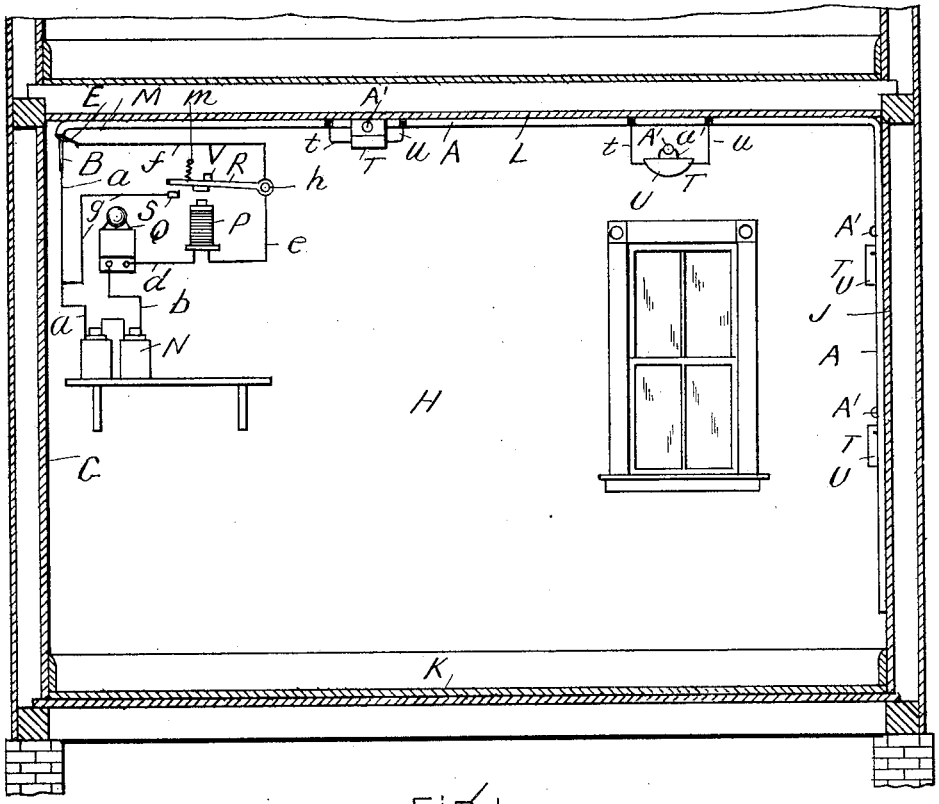

Fig. 1.

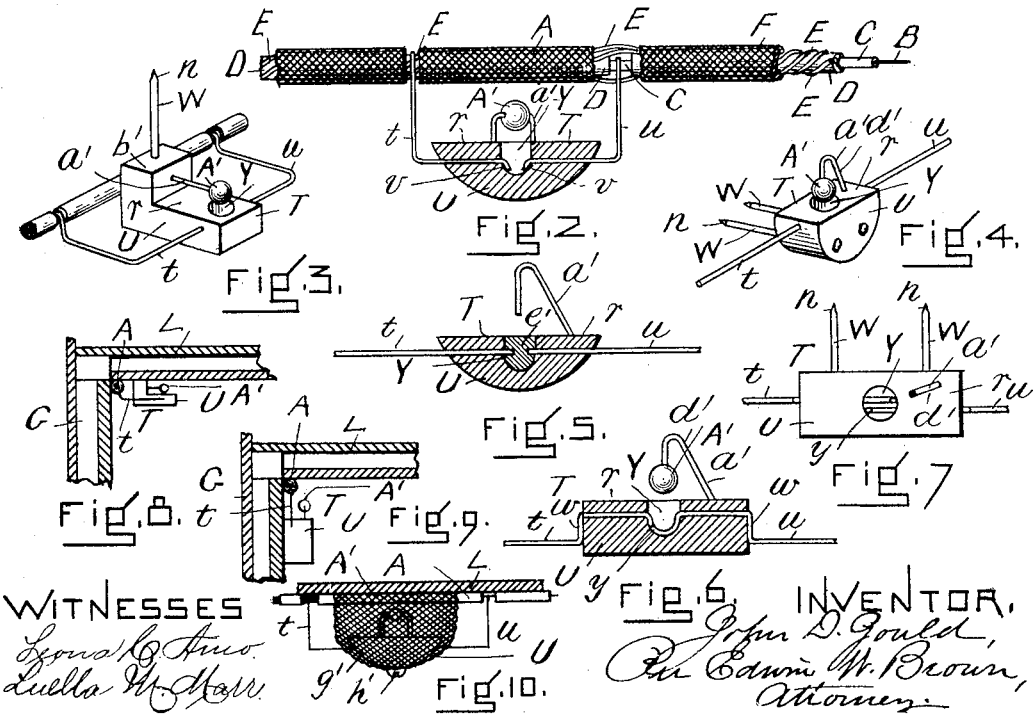

Fig. 2. Fig. 3. Fig. 4. Fig. 5. Fig. 6. Fig. 7. Fig. 8. Fig. 9. Fig. 10.

WITNESSES

Leona C. Amo

Luella M. Marr

INVENTOR.

John D. Gould,

Per Edwin W. Brown,

Attorney.

THE NORRIS PETERS CO., PHOTO-LITHO., WASHINGTON, D. C.