(Model.)

H. A. BLANCHARD.

METHOD OF SECURING REEDS OR CORDS TO THE EDGES OF MATERIALS.

No. 496,929. Patented May 9, 1893.

FIG. 1.

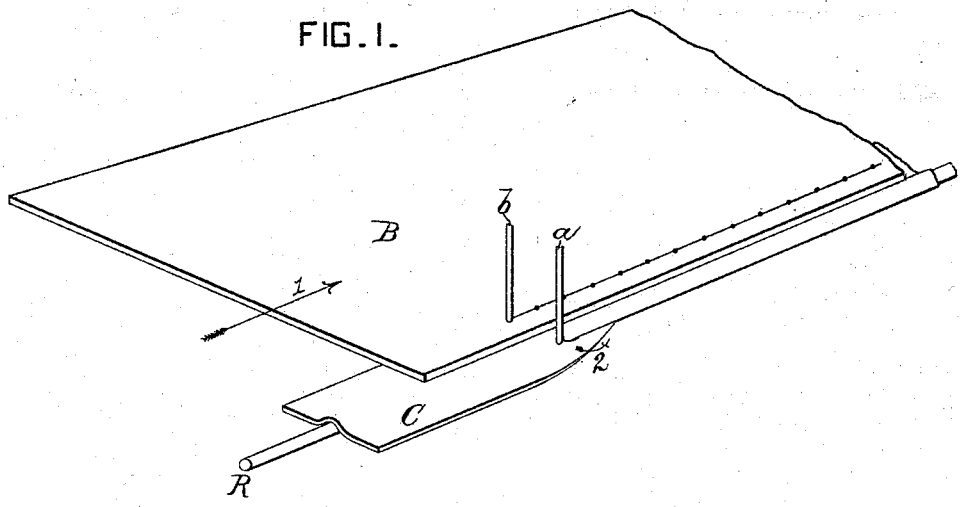

FIG. 2.

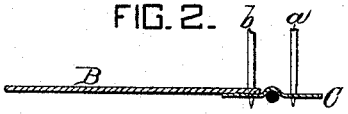

FIG. 3.

FIG. 4.

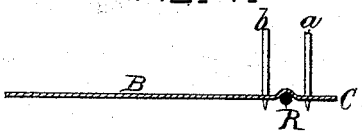

FIG. 5.

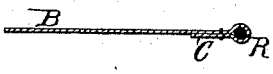

FIG. 6.

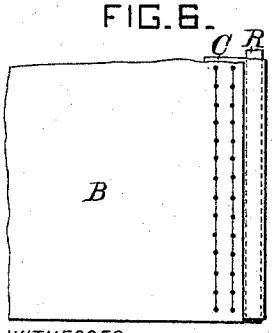

FIG. 7.

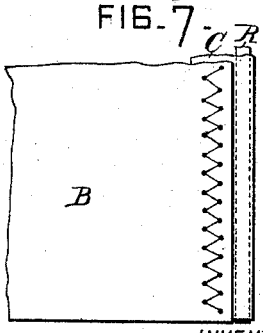

WITNESSES:

George Baumann

James Gracie

INVENTOR

Helen A. Blanchard

BY

Howson and Howson

her ATTORNEYS.

THE NORRIS PETERS CO., PHOTO-LITHO., WASHINGTON, D. C.