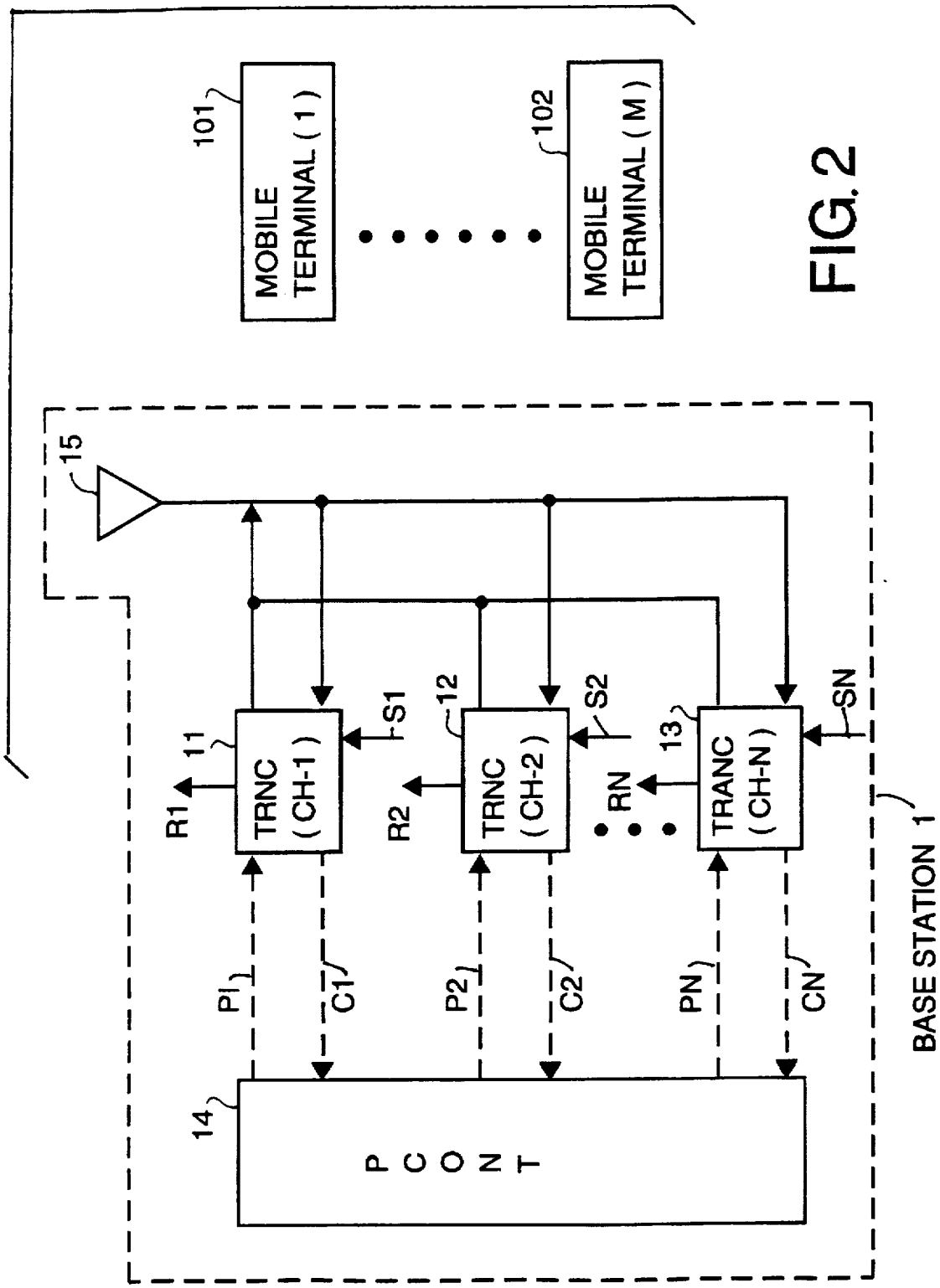
101
MOBILE TERMINAL (1)
102
MOBILE TERMINAL (M)
15
11
TRNC (CH-1)
R1
S1
12
TRNC (CH-2)
R2
S2
13
TRANC (CH-N)
RN
SN
P1
C1
P2
C2
PN
CN
14
P C O N T
BASE STATION 1

FIG. 2