US005794129A

United States Patent [19]

Komatsu

[11] Patent Number: 5,794,129

[45] Date of Patent: Aug. 11, 1998

[54] **MOBILE COMMUNICATION SYSTEM AND BASE STATION FOR USE THEREIN**

[75] Inventor: **Masahiro Komatsu**, Tokyo, Japan

[73] Assignee: **NEC Corporation**, Tokyo, Japan

[21] Appl. No.: **678,996**

[22] Filed: **Jul. 12, 1996**

[30] **Foreign Application Priority Data**

Jul. 14, 1995 [JP] Japan 7-201399

[51] **Int. Cl.**[6] **H04B 1/00**

[52] **U.S. Cl.** **455/69**; 455/522; 455/115; 455/70; 455/561

[58] **Field of Search** 455/517, 522, 455/69, 115, 70, 103, 561, 524, 424

[56] **References Cited**

U.S. PATENT DOCUMENTS

5,333,175	7/1994	Ariyavisitakul et al.	455/69
5,345,598	9/1994	Dent	455/69
5,539,728	7/1996	Gaiani et al.	455/69
5,604,730	2/1997	Tiedemann, Jr.	455/69

FOREIGN PATENT DOCUMENTS

64-49336 2/1989 Japan .

Primary Examiner—Reinhard J. Eisenzopf
Assistant Examiner—Marsha D. Banks-Harold
Attorney, Agent, or Firm—Ostrolenk, Faber, Gerb & Soffen, LLP

[57] **ABSTRACT**

A transmission power control unit **14** receives from transceivers **11**, **12** and **13** transmission power control signals which are sent by mobile terminals and contain information on the extent to which the transmission power level is to be raised or lowered, and calculates information on the level of transmission power at which transmission should take place on each channel, i.e. transmission power control signals **P1**, **P2**, . . . , PN. It further calculates the sum of the transmission power control signals **P1**, **P2**, . . . , PN, checks whether or not that sum surpasses a prescribed value and, if it does, corrects the transmission power control signals **P1**, **P2**, . . . , PN. The transmission power control unit **14** controls the transmission power levels of the transceivers **11**, **12** and **13** according to the corrected values.
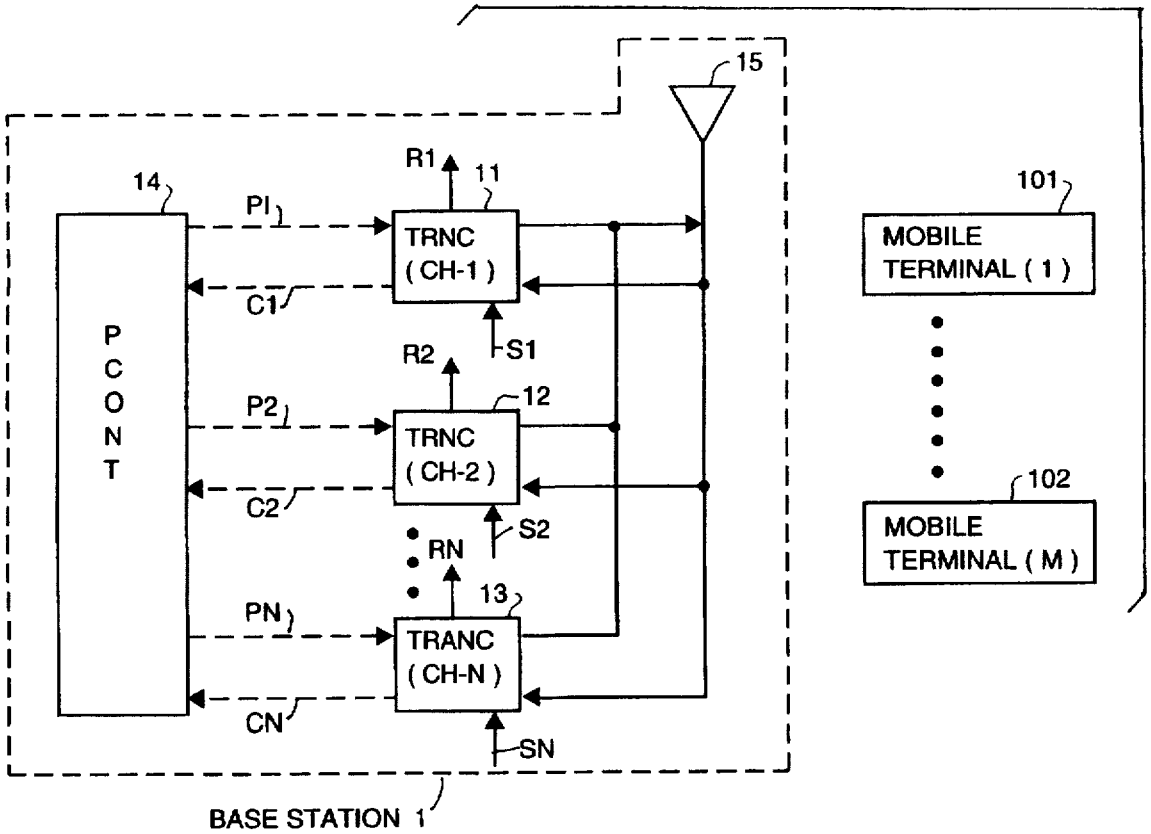
10 Claims, 4 Drawing Sheets