GROUND TRAINER FOR AIRCRAFT PERSONNEL

Filed Oct. 12, 1945 9 Sheets-Sheet 1

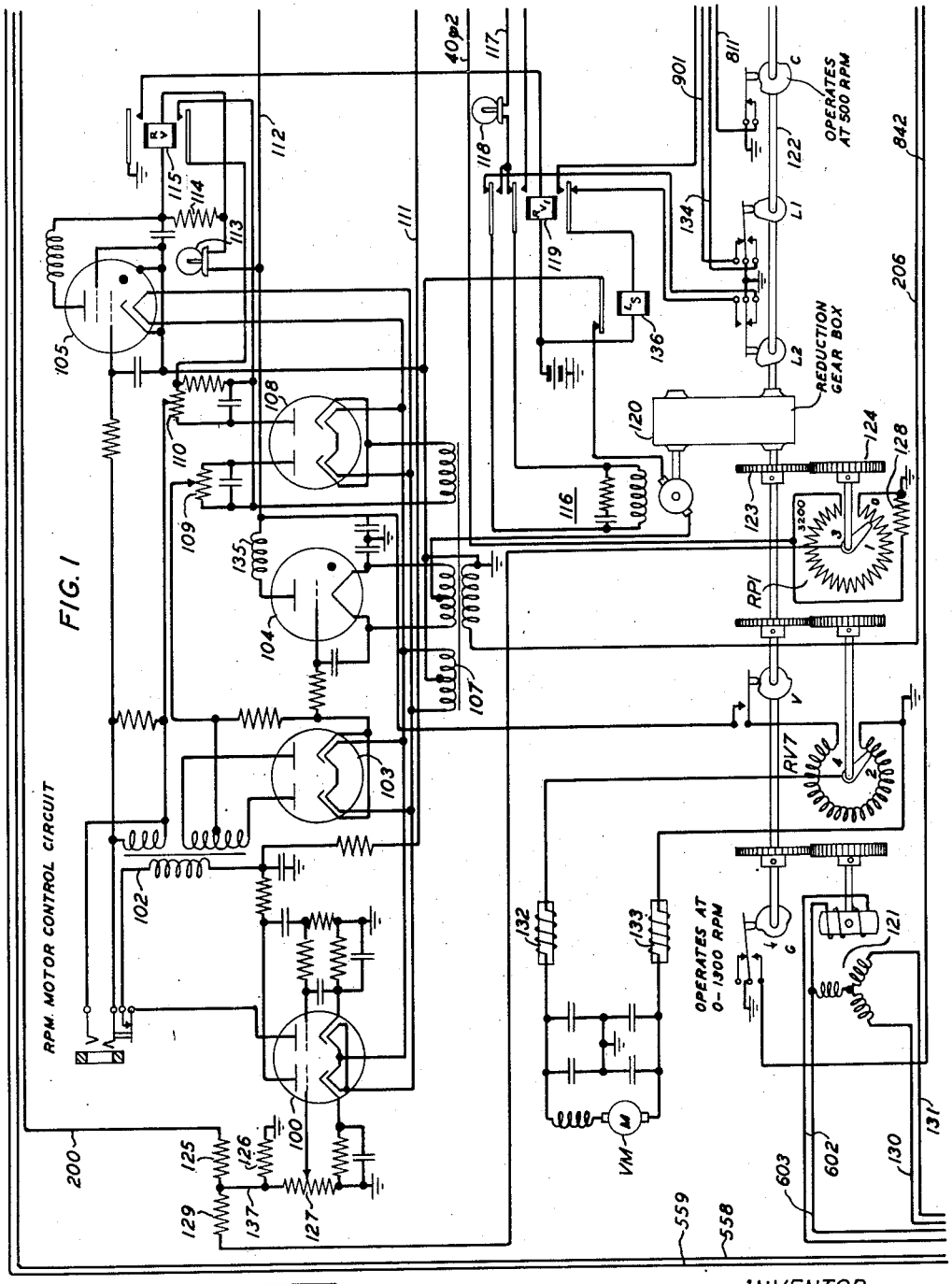

FIG. 11

FIG. 1	FIG. 2	FIG. 4	FIG. 8	FIG. 9
FIG. 3	FIG. 5	FIG. 6	FIG. 7	

INVENTOR
C. E. GERMANTON
BY P. C. Smith
ATTORNEY